TOWN
OF
THURMONT

PUBLIC WORKS DEPARTMENT

STANDARD DETAILS

FOR

WATER MAINS, SANITARY SEWER, STREETS
AND
RELATED STRUCTURES

MARION W. RICE
SUPT. PUBLIC WORKS

MAY 1982
REVISED 2012

STANDARD SPECIFICATIONS

SANITARY SEWER SYSTEM

SECTION 100

I. General

A. Description

This section includes all work necessary to provide sanitary sewer complete in place in accordance with contract documents.

Quality Assurance

1. Sanitary Sewer Pipe Field Tests

a. Reference Section 02600 for Ductile Iron Pipe

b. Reference Section 02610 for PVC Pipe

c. Reference Section 02650 for Cured in Place Pipe Lining

d. Reference Section 02765 for CCTV Inspection of Sanitary Sewer Line

e. One year after manholes, sanitary sewer main lines, and sanitary sewer laterals have been installed, the manholes, sanitary sewer main lines, and sanitary sewer laterals are to be high pressure cleaned and cctv inspected. This is the responsibility of the contractor. Reference Sections 02765 and 02767.

2. Sanitary Sewer Manhole Field Tests

a. Reference Section 02700 for Precast Concrete Manholes

b. Reference Section 02750 for Rehabilitated Manholes

3. Sanitary Sewer Force Main Tests

a. Reference Section 02600 for Ductile Iron Pipe

b. The contractor shall provide all equipment for and conduct pressure tests under pressures indicated on the plans. Tests conducted on Ductile Iron Pipe shall also meet requirements of Section 02600.

1. Test pipe after completion of backfill in lengths directed by the Superintendent. Close ends of test sections with valves or plugs where possible.

2. Fill the length of force main under test with water and subject it to the maximum of 100 psi sustained internal pressure plus water hamper, at the low point : as indicated in the contract documents. Maintain pressure for a minimum of two hours. Town personnel will operate all valves during the test.

3. Should test results show any visible leakage, displacement, or damage. The contractor can stop the test and repair the problem. After the repair the contractor shall retest until specified conditions are met to the satisfaction of the superintendent, at no additional cost to the Town.

c. The maximum allowable leakage shall be determined from the following formula:

$$L = 25\ DM$$

L allowable leakage in gallons per hour

D nominal diameter of pipe in inches

M miles of pipe

4. Inspection and Testing of Pipe and Materials

a. The superintendent may inspect and test all pipe, pipe fittings, and joint material upon delivery to the site. The pipe manufacturer or supplier shall furnish materials to be tested and labor as required to assist the superintendent with tests.

b. The manufacture or supplier shall provide ample space between rows of stockpiled pipe and materials to facilitate adequate inspection.

c. The manufacturer or supplier shall provide to the superintendent prior to commencing the inspection of pipe and material for an order, with the complete contract number, contractors name, the pipe diameters, classes and footage of pipe needed to fill the order.

d. The manufacturer or supplier shall provide evidence to the superintendent prior to inspection, that there is adequate quantity of pipe available of the required diameters, classes and designs for inspection.

e. The pipe manufacturer or supplier shall provide facilities for conducting a load bearing test.

f. The pipe manufacturer or supplier shall provide competent personnel for the preparation and conducting hydrostatic and load bearing tests. The superintendent and/or inspector have the right to be present during all phases of testing.

II. MATERIALS

A. General

1. The contractor shall furnish and lay all PVC and Ductile Iron Pipe sanitary sewers, including excavation and backfill and all appurtenances, such as manholes and house connections as shown on the drawings, details and/or as specified.

   a. For house connections from the mainline connection to the property line cleanout furnish PVC pipe wall thickness classification 35. Install pipe per Detail numbers 100, 110, 111, 112, and 113. Reference details 121 and 122 for Sewer Mains which are CIP Lined. Also reference sections 02040, 02200, and 02610.

   b. For main line sanitary sewer mains use PVC Pipe or Ductile Iron Pipe as specified. Reference section 02040, 02200, and 02610.

   c. For force main lines from pumping stations use Ductile Iron Pipe.

B. Materials Requirements

1. Pipe and Fittings

   a. Reference Sections 02600 for Ductile Iron Pipe, 02610 for PVC Pipe, 02650 for Cured in Place Pipe Lining.

   b. General-all pipe between structures shall be of the same size and material, and shall be furnished by the same manufacturer. Each pipe length and all fittings shall be clearly marked with the manufacturer's name and pipe type or strength.

   c. Pipe with blisters, bubbles, cuts or scrapes on the interior or exterior surfaces, which appreciably damage the wall thickness, or other imperfections which impair the performance or life of the pipe will be rejected.

1. Joints shall be elastomeric gasket joints resulting in water tight seals.

2. PVC pipe shall be legibly marked as follows at intervals of five feet maximum; manufacturer's name or trademark, pipe size, PVC classification, appropriate legend such as PSM SDR-35 PVC Sewer pipe, ASTM D 3034, manufacturer' lot number, date of manufacture and point of origin. Pipe not marked as indicated herein may be rejected.

3. PVC fittings shall be legibly marked as follows; manufacturers name or trademark, normal size, PVC ASTM D 3034 or AST F 679.

d. Ductile Iron Pipe for force mains or sanitary sewer mains shall meet requirements set forth in Section 02600.

e. Stoppers for all types of pipe shall be watertight, made as the same material it is inserted in, and be of an approved design as furnished by the pipe manufacturer.

3. Granular Bedding Material Reference Sections 02010, 02600, 02610, and 02700. Also Reference Detail number 100.

4. Manholes

a. Precast Manholes Reference Section 02700. Also Reference Detail numbers 101, 102, 103, 104, 105, 107, and 115.

b. Existing Manhole Rehabilitation Reference Section 02750. Also reference Detail numbers 101, 104, 105, 106, 107, 109, 109 A, 114, 115, 116, and 117.

c. Asphalt based waterproof coating for exterior of manholes shall be mineral filled solvent type meeting requirements of MIL-C-82052.

5. Quick setting non shrink grout shall conform to requirements of Corp of Engineers CDR-588, octocrete, speedcrete or equal. Also Reference Section 03300 for Concrete and Grouts.

III. Execution

1. Preparation

a. Trench excavation and backfill shall be as specified in Detail number 100. Also Reference Section 02200. Before commencing excavation at each location, dig test pits as directed by the superintendent. Excavate test pits as specified sufficiently in advance of trench construction so that reasonable changes in line

and grade can be made where the location of existing structures varies from that shown.

b. Provide granular bedding material under all sanitary sewer pipes in accordance with Sections 02200, 02600, and 02610. Also Reference Detail 100. Provide encasement and/or concrete cradle where indicated on the plans. Ensure that pipes are well bedded.

2. Laying Pipe

a. Lay pipe to a true uniform line and grade as indicated with continuous bearing of barrel in cradle or bedding material. Handle pipe and fittings with care so as to avoid damage. Where indicated, provide erosion checks or concrete anchors in accordance with Standard Details.

b. Lay pipe up grade with the bell or groove pointing the direction of upstream. Lay each section of pipe in such a manner as to form a close concentric joint with the adjoining section and to prevent sudden offsets in the flow line.

c. Construct mitered and curved bends where indicated in accordance with the Standard Details and plans. Curved bends shall have a uniform interior radius.

d. Place sufficient backfill on each section of pipe, as it is laid to hold it firmly in place.

e. Clean out the interior of the pipe as the work progresses. f. Keep trenches and excavations free of water during construction until final inspection. When the work is not in progress, securely close open ends of pipe and fittings to prevent trench water, earth or other substances from entering the pipes or fittings.

g. Provide a minimum of three feet of cover over PVC and Ductile Iron Pipe.

3. Sewer House Connections

a. Provide sewer house connections and sewer drop house connections where indicated in accordance with the Standard Detail numbers 100, 110, 111, 112, 113, and 119. Reference details 121 and 122 for Sewer Mains which are CIP Lined Also Reference Sections 02200 and 02610.

b. Where sanitary sewer lines exceeds nine feet in depth, drop house connections shall be used to meet a depth of eight feet six inches below pavement at the cleanout profile at the cleanout at the property line.

c. Where possible, place house connections simultaneously with construction with the construction of the new main line sewer before backfilling the main line sewer.

d. Lay house connection pipe at a two percent grade, unless otherwise indicated on the plans.

e. Mark the location of the end of the sewer connection pipe at the property line with a 2x4 timber, painted red placed vertically from the bottom of the trench and extending two feet above grade.

f. If curb and gutter are present mark on curb with a stamped S into the concrete where sewer lateral enters property.

4. Joints

a. Joints for Sanitary Sewer Pipe

1. Prior to joining pipe liberally coat pipe joints with lubricant. Fit the bell or spigot with gasket according to manufacturer's instructions. Join pipes with equipment designed for the purpose. Before joint is completely home, check the position of the gasket using a suitable gauge. If the gasket is found to be dislocated, repeat the entire joining process using a new gasket. The rubber gasket shall be the sole element relied upon for water tightness.

b. Joints for Ductile Iron Pipe for main line sanitary sewers shall be as specified in Section 02600.

c. Joints for PVC Pipe shall be elastomeric gasket joints assembled with the manufacturer's recommendations. Also Reference Section 02610.

5. Manholes

a. For Precast Concrete Manholes Reference Section 02700 and Detail numbers 101, 102, 103, 104, 105, 107, 109, 109 A and 115.

b. For Manhole Rehabilitation Reference Section 02750. Also reference Detail numbers 101, 104, 105, 105, 106, 107, 109, 114, 115, 116, and 117.

c. Manholes shall be watertight.

e. Construct manholes or precast sections, in accordance with Standard Details and the plans. Make watertight connections between base and risers. Place

axis of manholes over directly over the center lines of the pipe unless otherwise shown.

f. Construct appropriate flow channels in the bottom of the manholes, shown in the Standard Detail numbers 101 and 115 and plans specified herein below.

   1. Channel shall be lined with cast-in-place concrete mix #1 using type II cement with silka sand and GP aggregate. Channel shall slope smoothly and evenly from inlet pipes to the effluent pipe.

g. Drop Manholes

   1. Drop Manholes shall be used when the invert of the influent sanitary sewer is two feet or more above the manhole invert. When this difference in elevation is less than two feet the manhole invert shall be filleted to prevent solids deposition.

   2. Drop Manhole shall be constructed with inside drop connection. Reference Detail number 109 and 109A.

h. When installing pipe in to a sanitary sewer manhole Reference Section's 02700, 02750, and 03300. Also Reference Detail number 116.

i. Manhole Hardware

   1. Reference Section's 02700 and 02750. Also Reference Detail numbers 101, 102, 103, 104, 105, 106, and 107.

   2. Install additional steps as needed.

   3. Install cast iron watertight frame and cover for each manhole.

   4. Cement rubber gasket in watertight manholes requiring the inner cover in groove with a material not affected by water such as Permatex or equal.

j. If a manhole lid is installed that has open pick holes an Inflow Protector shall be installed.

k. Adjustments to manhole rim height may be done by using approved East Jordan Ironworks riser ring. Locking Lid manhole covers shall be dug up and adjusted, no riser rings are allowed for height adjustments on Locking Lids.

5. Sewer Vents

   a. Provide sewer vent as shown on plans.

   b. Pipe fitting for the sewer vent shall be made of Brass or Stainless Steel.

6. Repairs of leaks in sanitary sewer pipe

   a. Repairs of leaks in sanitary sewer pipe shall follow detail 118.

7. Sanitary Sewer House Connection

   a. Utilize existing PVC tap at sanitary sewer main unless otherwise directed by the superintendent. If this cannot be done abandon existing tap and cut in a new wye branch per Detail numbers 110 and 111. After new wye is in place, continue installing the sanitary sewer house connection to the property line as shown in Standard Detail numbers 112 and 113.

      1. For VCP Sanitary Sewer Main use a Ductile Iron wye fitting with PVC pipe on either end of the fitting. Attach new assembly to existing sanitary sewer main with shear band ferncos on each end of assembly.

      2. For PVC Sanitary Sewer Main use a PVC wye fitting with PVC pipe on either end of the fitting. Attach new assembly to existing sanitary sewer main with shear band ferncos on each end of the assembly.

      3. For Cured in Place Lined Sanitary Sewer Main reference Detail 121 and 121.

   b. Where indicated or directed by the superintendent, tap directly in sanitary sewer manholes for house connections.

   c. Provide cleanouts installed four feet back of the property line toward home or as indicated on the plans for all sewer connections. Reference Detail numbers 112 and 113.

8. Once sanitary sewer pipe and sanitary sewer manholes have been installed the Town's GIS profile is to be updated with the new GIS points. This is to include inverts for rim elevation of manholes, inverts of all influent and effluent pipes inside manholes, and manhole placement.

9. Reference Detail number 400, 401, and 402 for restoration of paved areas on Town owned Roads. Also Reference section 400 and 450. Reference section 500 for

restoration of grassed areas. Reference Detail 134 for restoration of paved areas on State owned Roads. Also Reference section 02900.

IIII. Repairs

1. Any Damaged Sewer Main/ Sewer Lateral shall be repaired by Referencing Detail 118 and Referencing Section 02200, 02040, 02600, 02610, 02760, and 02900.

2. Any Damaged CIP Sewer Main shall be repaired by Referencing Detail 123 and Referencing Section 02040, 02650, 02760, 02765, and 02767.

3. Any Damaged Manhole shall be repaired by Referencing Detail 101, 102, 103, 104, 105, 106, 107, 109, 114, 115, 116, and 117. Also Reference Section 02200, 02600, 02700, 02750, 02760, and 03300

4. Any Damaged Manhole that has been Rehabilitated shall be repaired by Referencing Detail 101, 102, 103, 104, 105, 106, 107, 109, 114, 115, 116, and 117. Also Reference Section 02200, 02600, 02700, 02750, 02760, and 03300.

Town of Thurmont Sanitary Sewer System

Standard Detail Drawing Table of Contents.

Detail No.	Title
100	Pipe Bedding Details
101	Manhole Schedules & General Requirements
102	Standard Precast Manholes with Cone Sections (4' and 5' Diameter)
103	Standard Precast Manholes with Flat Top Sections
104	Standard Manhole Covers
105	Standard Manhole Frames for Covers
106	Rehabilitation & Height Adjustments of Existing Manhole Frames & Covers
107	Installation of Manhole Frames & Covers
109	Inside Drop Connection for Manholes
110	Service Lateral Tee Wye Connections to New Sewers
111	Service Lateral Tee Wye Connection to Existing Sewers
112	Standard Service Lateral Installation
113	Typical Cleanout Details
114	Complete Manhole Abandonment
115	Plan of Typical Channelization of Sewer Manholes
116	New Pipe Connection at Manhole
117	Precast Doghouse Manhole Installed Over Existing Sewer
118	Point Repair to Existing Sewer
120	Insignia End Seal for LMK Technologies Installation for CIPP Pipe Seal at Manhole
121	Service Lateral Connection to Existing CIP Lined Sewers
122	Service Lateral Connection to Existing CIP Lined Sewers
123	Sewer Main Repair on CIP Lined Pipe

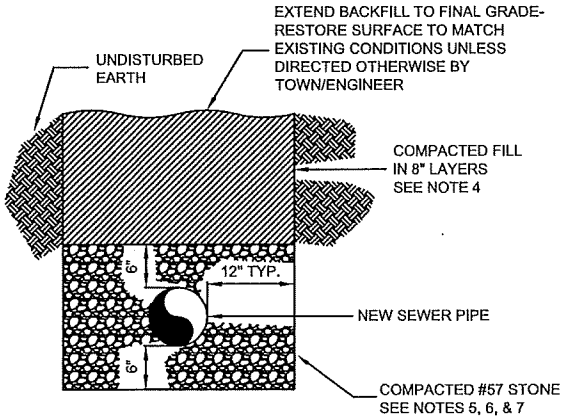

PIPE BEDDING FOR SERVICE LATERALS (4" AND 6" PIPE, ANY PIPE MATERIALS)

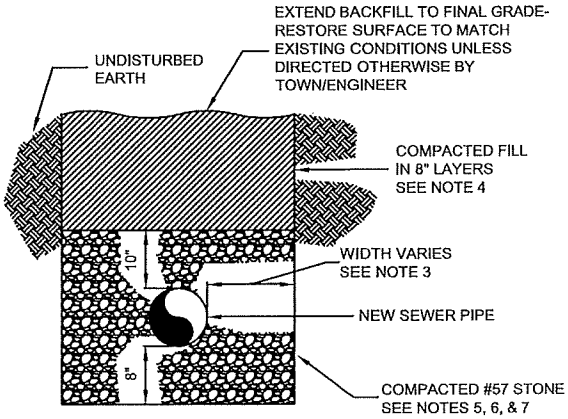

PIPE BEDDING FOR PVC PIPE (8" AND LARGER)

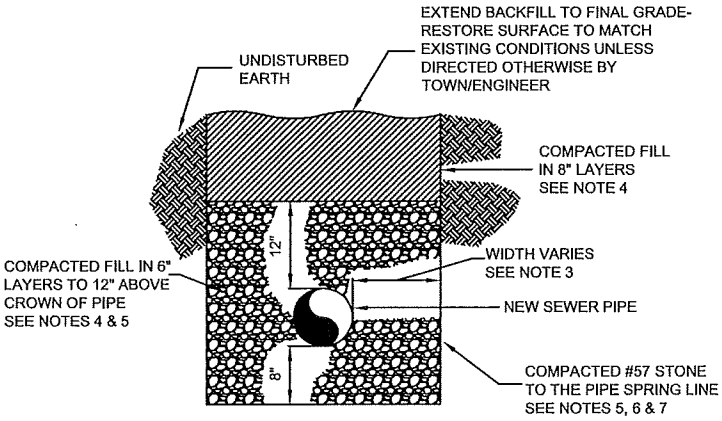

PIPE BEDDING FOR DUCTILE IRON PIPE (8" AND LARGER)

NOTES:

1. PIPE BEDDING DETAIL APPLIES TO ALL NEW SEWER PIPES INSTALLED.

2. THE CONTRACTOR SHALL USE A TRENCH BOX OR SHEETING AND SHORING IN ACCORDANCE WITH OSHA REGULATIONS WHILE INSTALLING NEW SEWERS. THE CONTRACTOR WILL NOT BE ALLOWED TO SLOPE TRENCH WALLS.

3. TRENCH WIDTH SHALL BE LIMITED TO AND THE CONTRACTOR SHALL ONLY BE PAID FOR THE FOLLOWING UNLESS OTHERWISE APPROVED IN WRITING BY TOWN/ENGINEER:
   - 4" AND 6" PIPE - 12" EACH SIDE
   - 8" TO 15" PIPE - 15" EACH SIDE
   - 16" TO 30" PIPE - 18" EACH SIDE

4. IN GRASSED AREAS, COMMON FILL MAY BE USED AS BACKFILL. IN MD SHA, COUNTY AND TOWN PAVED ROADS, CR-6 SHALL BE IMPORTED AND USED AS BACKFILL. REMOVE ALL EXCAVATED MATERIAL AND DISPOSE OFFSITE.

5. COMPACTION OF STONE AND COMMON FILL TO 12" ABOVE PIPE TO BE WITH "JUMPING JACK" HAND MECHANICAL TAMPS ONLY.

6. MAINTAIN GROUND WATER LEVEL AT LEAST 1 FOOT BELOW THE BOTTOM OF THE STONE BEDDING AT ALL TIMES.

7. IN ROCK, REDUCE STONE BEDDING UNDER PIPE AND STRUCTURES TO 6 INCHES.

TOWN OF THURMONT
FREDERICK COUNTY, MD

PIPE BEDDING DETAILS

							DETAIL NO.
No.	Date	By	Revision	Scale	Approved By	Date	100

MANHOLE SCHEDULES

MH DIAMETER	LARGEST PIPE DIAMETER	PIPE DIAMETER	MAX MH SPACING
4 FEET	8" TO 15"	8" TO 12"	400 FEET
5 FEET	16" TO 27"	15" TO 27"	450 FEET

DETAIL NO.	MANHOLE TYPE	WHEN IN USE
102	PRECAST WITH CONE SECTION	1. USE FOR 4-FOOT AND 5-FOOT DIAMETER MANHOLES ONLY 2. MANHOLES WILL TERMINATE AT GRADE IN LANDSCAPED AREAS AND 16 TO 24 INCHES ABOVE GRADE IN EASEMENT AREAS
103	PRECAST WITH FLAT TOPS	1. USE FOR ALL 4-FOOT AND 5-FOOT DIAMETER MANHOLES THAT TERMINATE ABOVE GRADE. 2. USE FOR SHORT MANHOLES (4-FOOT AND 5-FOOT) WHERE A CONE SECTION WILL NOT WORK.

MANHOLE COVER ELEVATIONS

1. 1/2" BELOW FINAL PAVED SURFACES.
2. FLUSH WITH FINISHED GRADE IN LANDSCAPED/LAWN AREAS UNLESS OTHERWISE SPECIFIED.
3. 16 INCHES ABOVE GRADE IN EASEMENTS EXCEPT TO ACCOMMODATE FLOOD ELEVATIONS PER (4) BELOW.
4. COVERS TO TERMINATE AT LEAST 1 FOOT ABOVE THE 100-YEAR FLOOD ELEVATION BUT NO GREATER THAN 4 FEET ABOVE GRADE TOTAL. WHERE THE FLOOD ELEVATION IS 4 FEET OR MORE ABOVE GROUND, WATERTIGHT COVERS SHALL BE USED. THE MANHOLE COVER SHALL TERMINATE 2 FEET ABOVE GRADE, AND A VENT PIPE SHALL BE INSTALLED TO 2 FEET ABOVE THE 100-YEAR FLOOD ELEVATION.

GENERAL SPECIFICATIONS AND REQUIREMENTS

1. MANHOLE TO CONFORM WITH ASTM C478 EXCEPT AS MODIFIED BELOW.
2. MANHOLE BASE TO BE REINFORCED WITH A MINIMUM OF 0.20 SQUARE INCHES PER LINEAL FOOT EACH WAY. WALL REINFORCING TO BE MINIMUM OF 0.12 SQUARE INCHES PER LINEAL FOOT. EITHER TONGUE OR GROOVE SHALL HAVE REINFORCING EQUAL IN AREA TO MINIMUM WALL SECTION.
3. ALL JOINTS SHALL CONFORM WITH ASTM C443.
4. ~~STEPS TO BE PLASTIC PER DETAIL NO. 108.~~
5. ALL PIPE OPENINGS TO BE NO GREATER THAN 3" LARGER THAN OUTSIDE DIAMETER OF PIPE ALL AROUND AND ADDITIONALLY REINFORCED WITH A MINIMUM OF 0.20 SQUARE INCHES OF STEEL AT 90 DEGREES (ADDITIONAL REINFORCING NOT REQUIRED FOR CORED OPENINGS).
6. ALL SURFACES SHALL BE SMOOTH, EVEN TEXTURED WITH A MINIMUM OF HONEYCOMB, FINS, AND OTHER IMPERFECTIONS. THE ENGINEER OR OWNER REPRESENTATIVE RESERVES THE RIGHT TO REJECT MANHOLES.
7. NON-PENETRATING LIFTING HOLES SHALL BE PLUGGED WITH EXPANSION GROUT. PENETRATING LIFTING HOLES SHALL NOT BE ALLOWED.
8. PIPES SHALL BE CONNECTED TO MANHOLES WITH FLEXIBLE RUBBER BOOT CONNECTORS AS SHOWN IN THE DETAILS. WHERE REQUIRED AND/OR NECESSARY, CORED HOLES FOR SEWERS MAY BE USED. FOR CORED HOLES, FILL VOIDS WITH NON-SKRINK GROUT PER DETAIL NO 116.
9. STEPS TO BE OVER WIDEST PORTION OF BENCH.
10. BENCHING AND INVERT CHANNELS SHALL BE PRECAST BY THE MANHOLE MANUFACTURER. FORMED AND POURED IN PLACE BENCHES AND INVERTS MAY BE APPROVED IN CERTAIN SITUATIONS BY THE ENGINEER AND SHALL BE USED WHERE SPECIFICALLY REQUIRED SUCH AS FOR A DOGHOUSE MANHOLE. BENCHING CONCRETE SHALL BE MIN. 4000 PSI AND FIBER REINFORCING FOR POURED-IN-PLACE BENCHING. BENDS IN BENCH SHALL BE DESIGNED TO ALLOW A 3 FOOT LONG CAMERA TO EASILY ENTER THE SEWER PIPE. FOR PRECAST INVERTS, THE CONTRACTOR SHALL BE RESPONSIBLE FOR DETERMINING EXACT INVERT ELEVATIONS PRIOR TO MANUFACTURING THE MANHOLE INCLUDING WHERE CONNECTING TO EXISTING SEWERS. SEE DETAIL NO. 102 FOR ADDITIONAL REQUIREMENTS.
11. ALL MANHOLE SECTIONS SHALL BE DESIGNED FOR H-20 LOADING.
12. MINIMUM HEIGHT FOR CONCENTRIC CONES ON MANHOLES WITH BOLT DOWN FRAME AND COVER IS 36".
13. MATCH PIPE CROWN ELEVATIONS OF CONNECTING/INFLUENT SEWERS AND MAIN SEWER.
14. VACUUM TEST MANHOLES PER THE SPECIFICATIONS.
15. ALL FRAMES SHALL BE BOLTED TO THE FLAT TOP OR CONE SECTION PER DETAIL NO. 107. TWO (2) COMPLETE CIRCLES OF MASTIC SHALL BE INSTALLED UNDER THE FRAME BEFORE SETTING ON THE CONE SECTION OR FLAT TOP.

TOWN OF THURMONT
FREDERICK COUNTY, MD

MANHOLE SCHEDULES AND GENERAL REQUIREMENTS

No.	Date	By	Revision	Scale	Approved By	Date	DETAIL NO.
							101

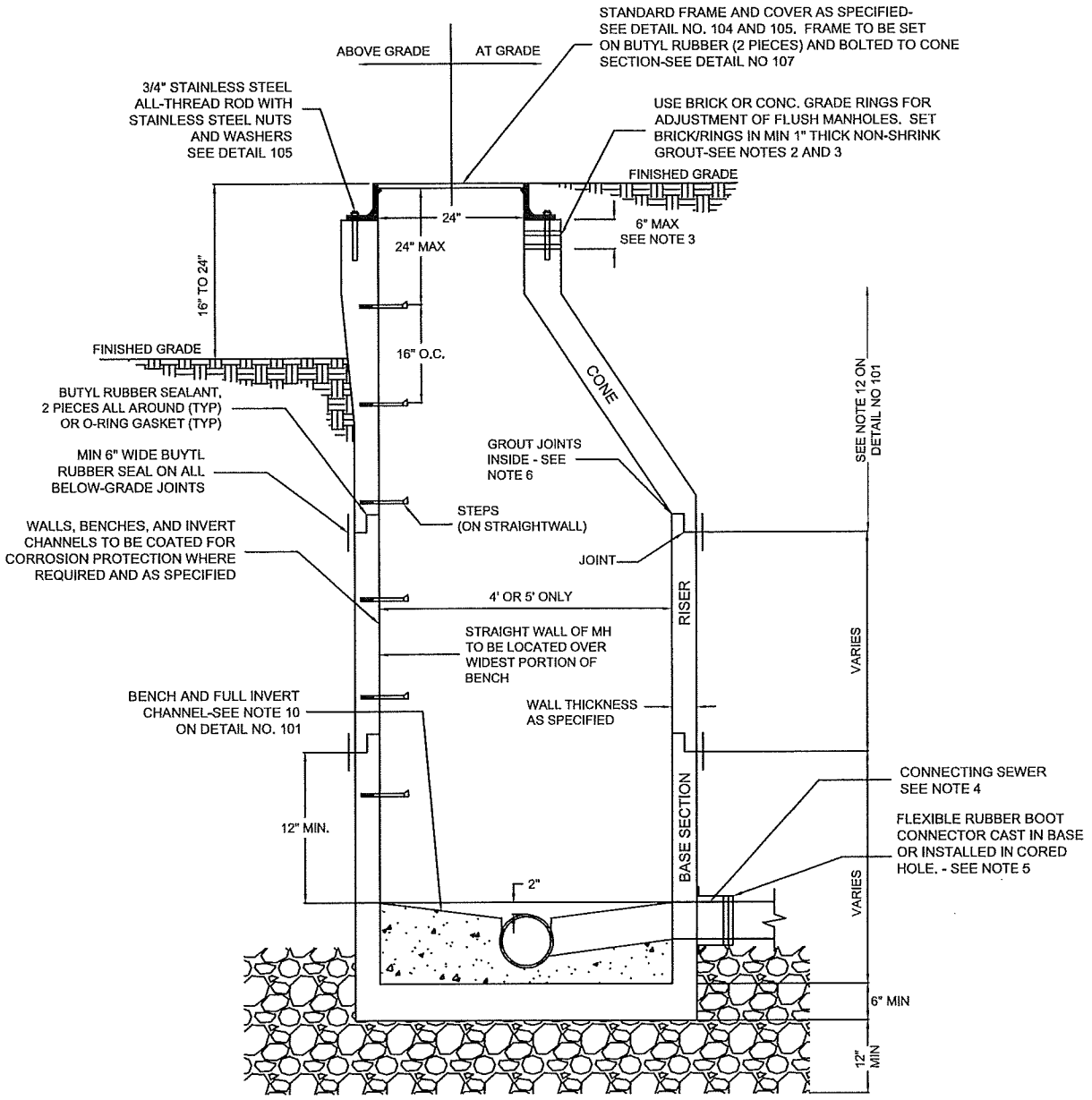

NOTES:

1. REFER TO DETAIL 101 FOR ALL MANHOLE REQUIREMENTS SCHEDULES.
2. NON-SHRINK GROUT SHALL COMPLETELY COVER THE BRICK/GRADE RINGS ON THE OUTSIDE, SHALL OVERLAP THE CONE SECTION A MINIMUM OF 6 INCHES AND SHALL COVER THE FRAME FLANGE COMPLETELY. SEE DETAIL NO. 107.
3. MANHOLE SHALL BE ORDERED WITH MINIMUM GRADE ADJUSTMENT. ORDER BASE, RISER, AND CONE HEIGHTS TO STACK OUT MANHOLE AS CLOSE AS POSSIBLE TO GRADE. CONTRACTOR TO SUPPLY ENGINEER WITH A SCHEDULE OF EACH MANHOLE SHOWING THE HEIGHTS OF EACH SECTION. MAXIMUM ADJUSTMENT SHALL BE 6 INCHES UNLESS APPROVED OTHERWISE. BRICK OR CONCRETE GRADE RINGS SHALL BE USED AS SPECIFIED. IF GRADE RINGS ARE USED, A SINGLE GRADE RING SHALL BE INSTALLED TO ACHIEVE THE REQUIRED ADJUSTMENT.
4. MATCH PIPE CROWN ELEVATIONS OF CONNECTING/INFLUENT SEWERS AND MAIN SEWER.
5. IF HOLE FOR PIPE MUST BE CORE DRILLED IN THE FIELD, REFER TO DETAIL 116 FOR REQUIREMENTS.
6. ALL JOINTS SHALL BE GROUTED INSIDE THE MANHOLE WITH NON-SHRINK, HYDROGEN SULFIDE RESISTANT GROUT.

TOWN OF THURMONT
FREDERICK COUNTY, MD

STANDARD PRECAST MANHOLES WITH CONE SECTIONS (4' AND 5' DIAMETER MANHOLES)

No.	Date	By	Revision	Scale	Approved By	Date	DETAIL NO.
							102

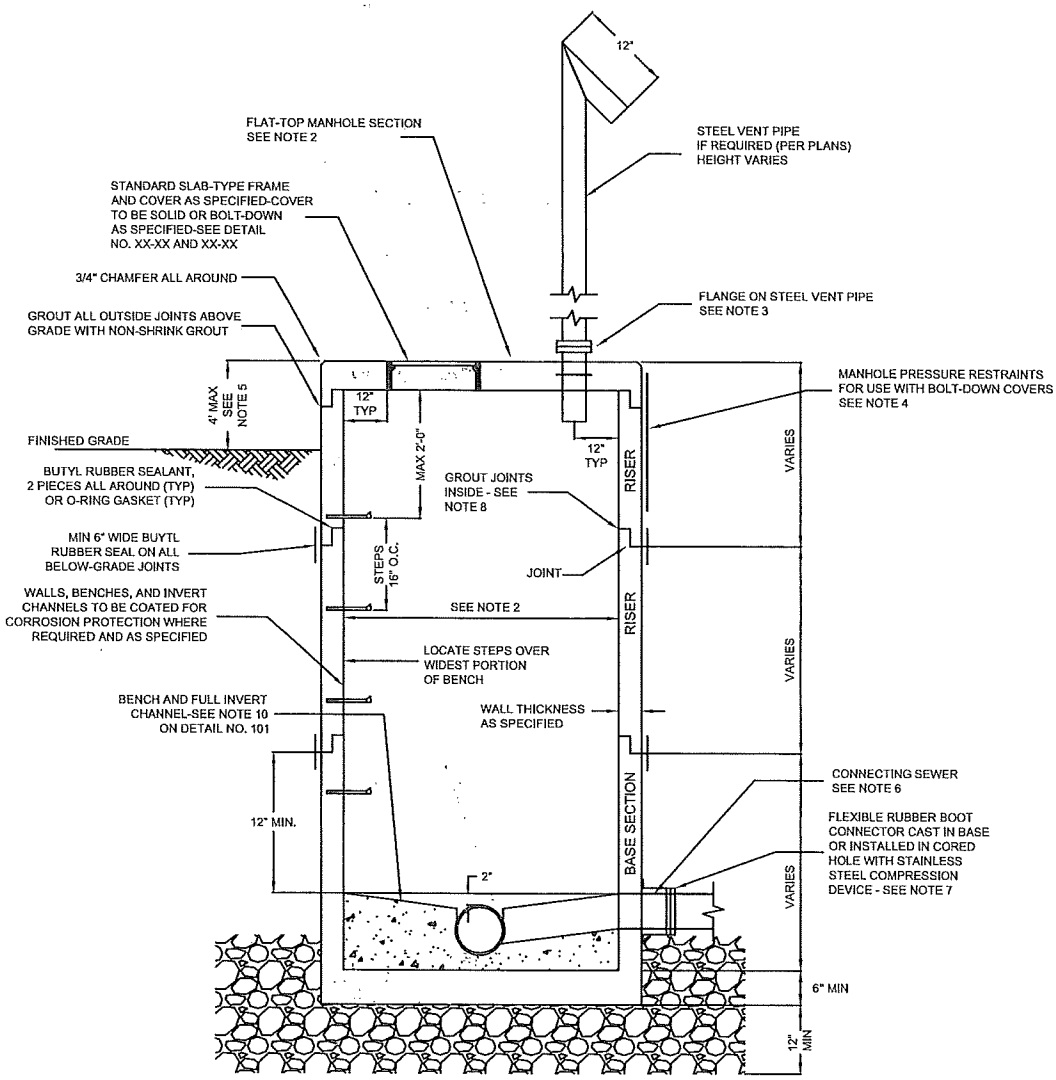

NOTES:

1. REFER TO DETAIL NO. 101 FOR ALL MANHOLE REQUIREMENTS AND SCHEDULES.

2. ALL 4-FOOT AND 5-FOOT MANHOLES TERMINATING MORE THAN 2 FEET ABOVE GRADE SHALL HAVE FLAT TOPS-SEE SCHEDULES ON DETAIL NO. 101. SLAB TYPE FRAMES AND COVERS SHALL BE THE STANDARD FOR FLAT TOPS-SEE DETAIL NOS. 104 AND 105. MINIMUM THICKNESS OF FLAT-TOPS SHALL BE 8" FOR 4-FOOT AND 5-FOOT DIAMETER MANHOLES.

   IN SOME INSTANCES, FLAT TOP MANHOLES WITH COVERS FLUSH WITH THE FINAL GRADE WILL BE REQUIRED, SUCH AS WHEN INSTALLING SHORT MANHOLES. IN THIS CASE, THE TOP SLAB ELEVATION SHALL BE BELOW THE FINAL GRADE ELEVATION AND A BUILT-UP TYPE FRAME AND COVER SHALL BE USED AND INSTALLED PER DETAIL NO. 107.

3. ALL FLAT TOP SECTIONS TERMINATING ABOVE GRADE SHALL BE FURNISHED WITH THE VENT PIPE STUB-OUT CAST INTO THE TOP SECTION UNLESS OTHERWISE APPROVED BY TOWN/ENGINEER. IF A VENT PIPE IS NOT SPECIFIED, INSTALL A BLIND FLANGE (SAME MATERIAL AS VENT PIPE) ON STU-BOUT-BOLT WITH STAINLESS STEEL HARDWARE.

4. PRESSURE RESTRAINTS ARE REQUIRED FOR ALL FLAT TOPS WITH WATERTIGHT COVERS UNLESS APPROVED OR DIRECTED. THREE RESTRAINTS SHALL BE EQUALLY SPACED AROUND THE MANHOLE. RESTRAINTS SHALL BE FLAT STEEL PLATES 3/8" X 3" X 24" LONG WITH A 7/8" HOLE 1-1/2" FROM EACH END. ANCHOR WITH 3/4" X 4" LONG GALV. STEEL ADHESIVE ANCHORS OR APPROVED EQUAL. RESTRAINTS TO BE HOT DIPPED GALVANIZED AFTER FABRICATION. AT LEAST 5 FEET OF VERTICAL RISER SHALL BE RESTRAINED-LENGHTEN BARS AS NECESSARY.

5. REFER TO MANHOLE SCHEDULES ON DETAIL NO. 101 FOR SPECIFIED COVER HEIGHTS ABOVE GRADE.

6. MATCH PIPE CROWN ELEVATIONS OF CONNECTING/INFLUENT SEWERS AND MAIN SEWER.

7. IF HOLE FOR PIPE MUST BE CORE DRILLED IN THE FIELD, REFER TO DETAIL 116 FOR REQUIREMENTS.

8. ALL JOINTS SHALL BE GROUTED INSIDE THE MANHOLE WITH NON-SHRINK, HYDROGEN SULFIDE RESISTANT GROUT.

TOWN OF THURMONT
FREDERICK COUNTY, MD

STANDARD PRECAST MANHOLES WITH FLAT TOP SECTIONS

							DETAIL NO.
No.	Date	By	Revision	Scale	Approved By	Date	103

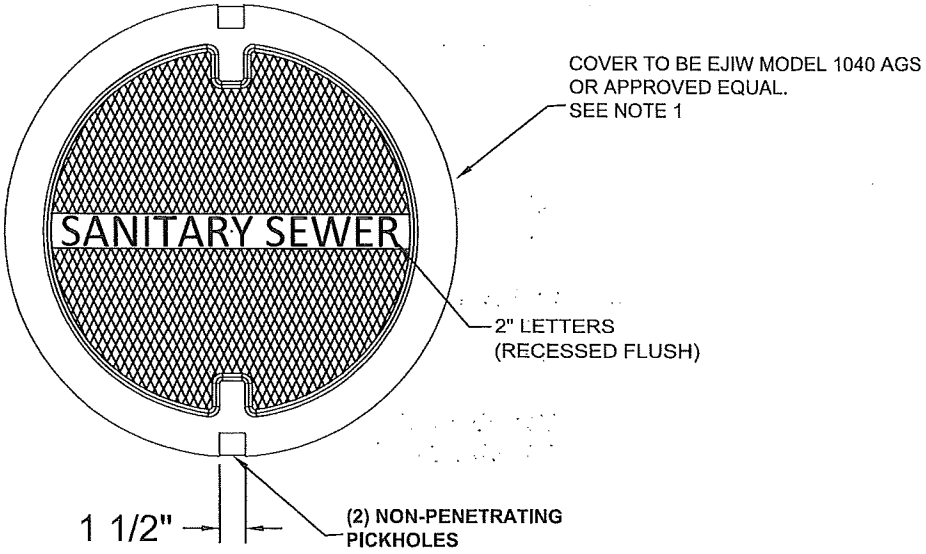

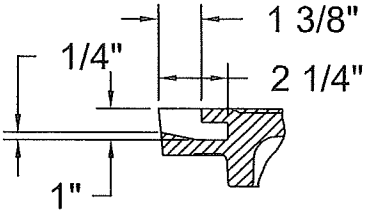

PICKHOLE DETAIL

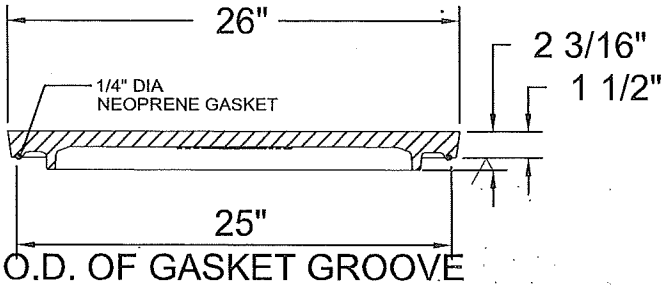

SECTION

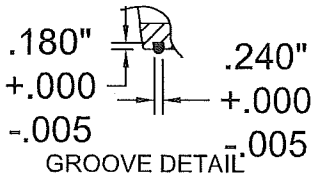

GROOVE DETAIL

NOTES:

1. ALTERNATE COVERS TO THOSE SHOWN MUST BE APPROVED BY ENGINEER/TOWN. A SAMPLE OF THE FRAME AND COVER MUST BE DELIVERED TO TOWN AS PART OF THE REVIEW AND APPROVAL PROCESS.

   COVERS MUST FIT ANY FRAME SHOWN IN DETAIL 105.

   EJIW = EAST JORDAN IRON WORKS (1-800-626-4653)

2. COVERS TO BE ASTM A48 CLASS 35 GRAY IRON WITH A MINIMUM WEIGHT OF144 POUNDS.

3. NOMINAL DIMENSIONS SHOWN TYPICALLY MEAN PLUS OR MINUS 1/4" UNLESS OTHERWISE APPROVED BY ENGINEER.

4. THE NON-PENETRATING PICKHOLE IS THE STANDARD OPENING DEVICE.

5. ALL COVERS TO BE FURNISHED WITH GASKETS AS SHOWN. SIDE/WIPER GASKETS ARE NOT APPROVED.

6. COAT FRAMES AND COVERS WITH TWO 8-MIL MIN. DFT COATS OF COAL TAR EPOXY WHEN CORROSION PROTECTION OF MANHOLES IS SPECIFIED. SANDBLAST PRIOR TO APPLYING EPOXY.

TOWN OF THURMONT
FREDERICK COUNTY, MD

STANDARD MANHOLE COVERS

No.	Date	By	Revision	Scale	Approved By	Date	DETAIL NO.
							104

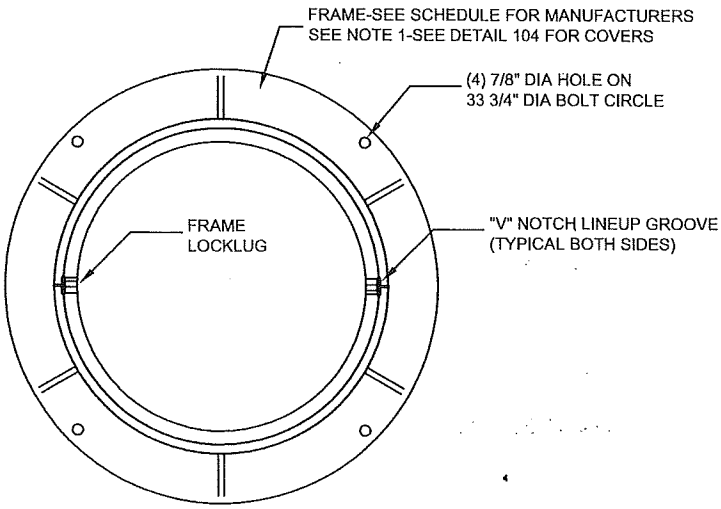

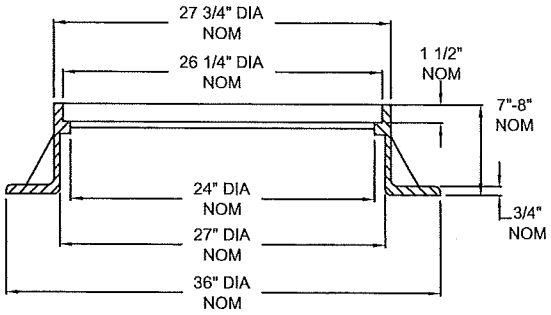

STANDARD HEIGHT

STANDARD HEIGHT

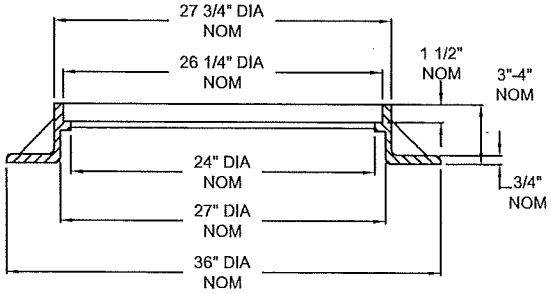

LOW PROFILE

LOW PROFILE

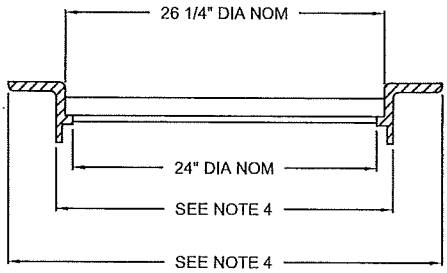

SLAB-TYPE

SEE NOTE 4

SLAB-TYPE

SEE NOTE 4

FRAME SCHEDULE

STANDARD HEIGHT:	EJIW MODEL 104010, OR APPROVED EQUAL-SEE NOTE 1 MIN. WEIGHT 205 POUNDS
LOW PROFILE:	EJIW MODEL 104610, OR A PPROVED EQUAL-SEE NOTE 1 MIN. WEIGHT 115 POUNDS
SLAB-TYPE:	EJIW MODEL 280010 TOP FLANGE, OR APPROVED EQUAL-SEE NOTES 1 AND 4

NOTES:

1. ALTERNATE FRAMES TO THOSE SHOWN MUST BE APPROVED BY TOWN/ENGINEER. A SAMPLE OF THE FRAME AND COVER MUST BE DELIVERED TO TOWN/ENGINEER AS PART OF THE REVIEW AND APPROVAL PROCESS.

   FRAMES MUST BE SUITABLE FOR USE WITH ANY COVER SPECIFIED IN DETAIL 104.

2. COVERS TO BE ASTM A48 CLASS 35 GRAY IRON WITH MINIMUM WEIGHTS SPECIFIED IN THE FRAME SCHEDULE.

3. NOMINAL DIMENSIONS SHOWN TYPICALLY MEAN PLUS OR MINUS 1/4" UNLESS OTHERWISE APPROVED BY TOWN/ENGINEER.

4. FRAME MANUFACTURER TO PROVIDE FINAL DIMENSIONS AS A SHOP DRAWING PRIOR TO FABRICATION.

5. COAT FRAMES AND COVERS WITH TWO 8-MIL DRY FILM THICKNESS (DFT) COATS OF COAL TAR EPOXY WHEN CORROSION PROTECTION OF MANHOLES IS SPECIFIED. SANDBLAST PRIOR TO APPLYING EPOXY.

TOWN OF THURMONT
FREDERICK COUNTY, MD

STANDARD MANHOLE FRAMES FOR COVERS

							DETAIL NO.
No.	Date	By	Revision	Scale	Approved By	Date	105

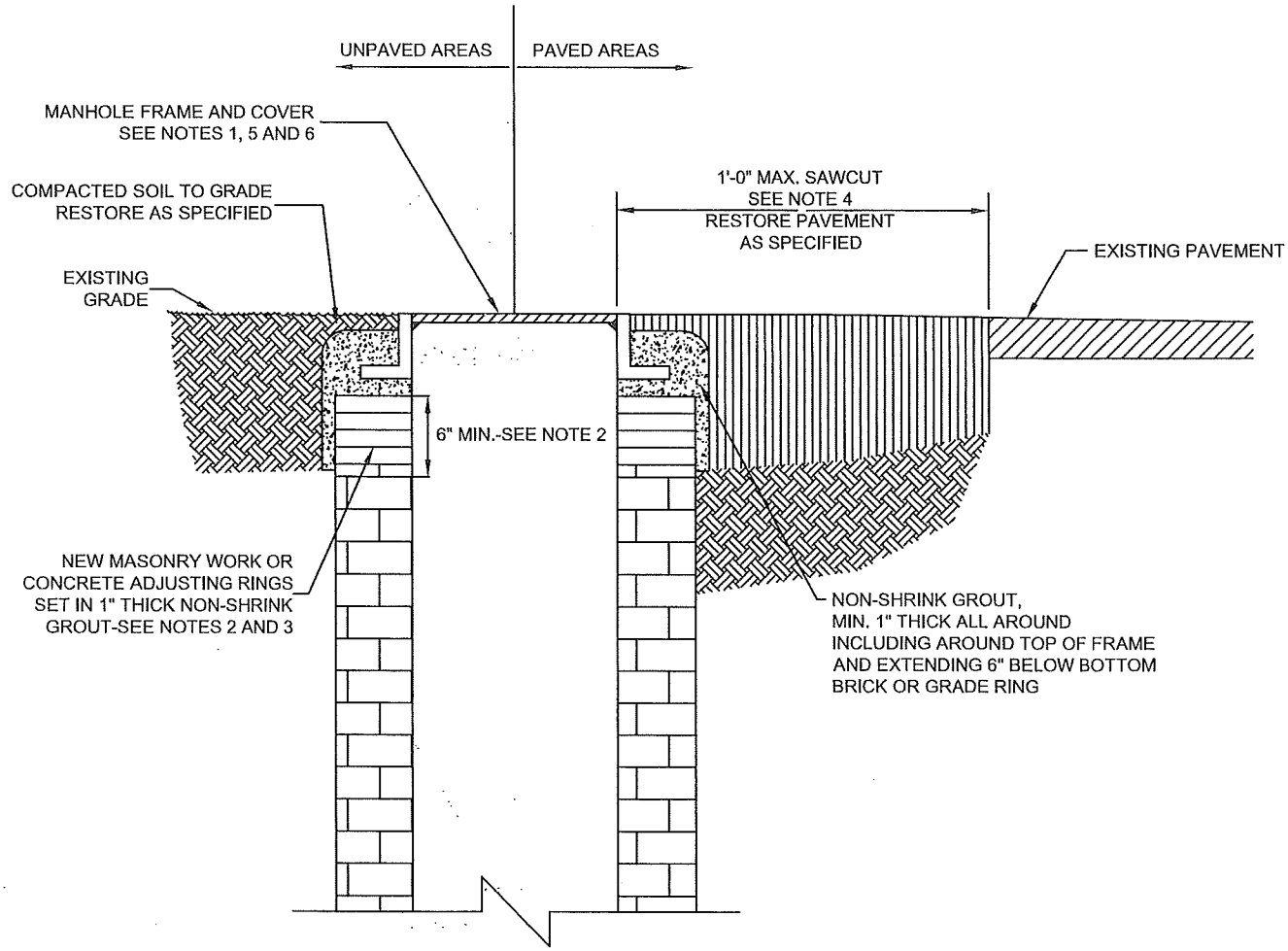

NOTES:

1. CONTRACTOR SHALL REFER TO THIS DETAIL WHEN RAISING MANHOLES AND WHEN RESETTING OR REPLACING EXISTING FRAMES AND COVERS. ALL REHABILITATION OF FRAMES AND COVERS SHALL BE COMPLETED PRIOR TO OTHER MANHOLE REHABILITATION WORK.

2. CONTRACTOR TO REMOVE AT LEAST 6" OF EXISTING BRICK AND/OR WALL MATERIAL PRIOR TO INSTALLING NEW MASONRY OR CONCRETE ADJUSTING RINGS TO PROVIDE A NEW SOLID SURFACE FOR SEATING THE FRAME AND TO PROVIDE A LEAK-TIGHT SEAL UNLESS OTHERWISE APPROVED BY TOWN/ENGINEER. ONLY ONE COURSE OF BRICK (MAX) SHALL BE USED.

3. REMOVE ALL LOOSE BRICKS AND MORTAR AND PROVIDE A SMOOTH LEVEL SURFACE PRIOR TO INSTALLING MASONRY OR CONCRETE ADJUSTING RINGS. BRUSH SURFACE WITH STIFF WIRE BRUSH PRIOR TO PLACING NON-SHRINK GROUT.

4. IN PAVED AREAS, PAVEMENT SHALL BE SAW-CUT NEATLY IN A SQUARE AROUND EXISTING MANHOLES. PAVEMENT SHALL BE IN ACCORDANCE WITH DETAIL AND MEET ALL MD SHA REQUIREMENTS. PROVIDE TACK COAT ALL AROUND AT SAWCUT/JOINT WITH EXISTING PAVEMENT.

5. FINAL ELEVATION OF MANHOLE COVER TO BE EQUAL TO THE EXISTING COVER ELEVATION UNLESS NOTED OTHERWISE. SET FRAME AND COVER TO 1/2" BELOW GRADE.

6. NEW FRAMES AND COVERS WHERE REQUIRED SHALL BE AS SPECIFIED AND SHOWN IN STANDARD DETAIL NO. 104 AND 105.

TOWN OF THURMONT
FREDERICK COUNTY, MD

REHABILITATION AND HEIGHT ADJUSTMENT OF EXISTING MANHOLE FRAME AND COVER

No.	Date	By	Revision	Scale	Approved By	Date	DETAIL NO.
							106

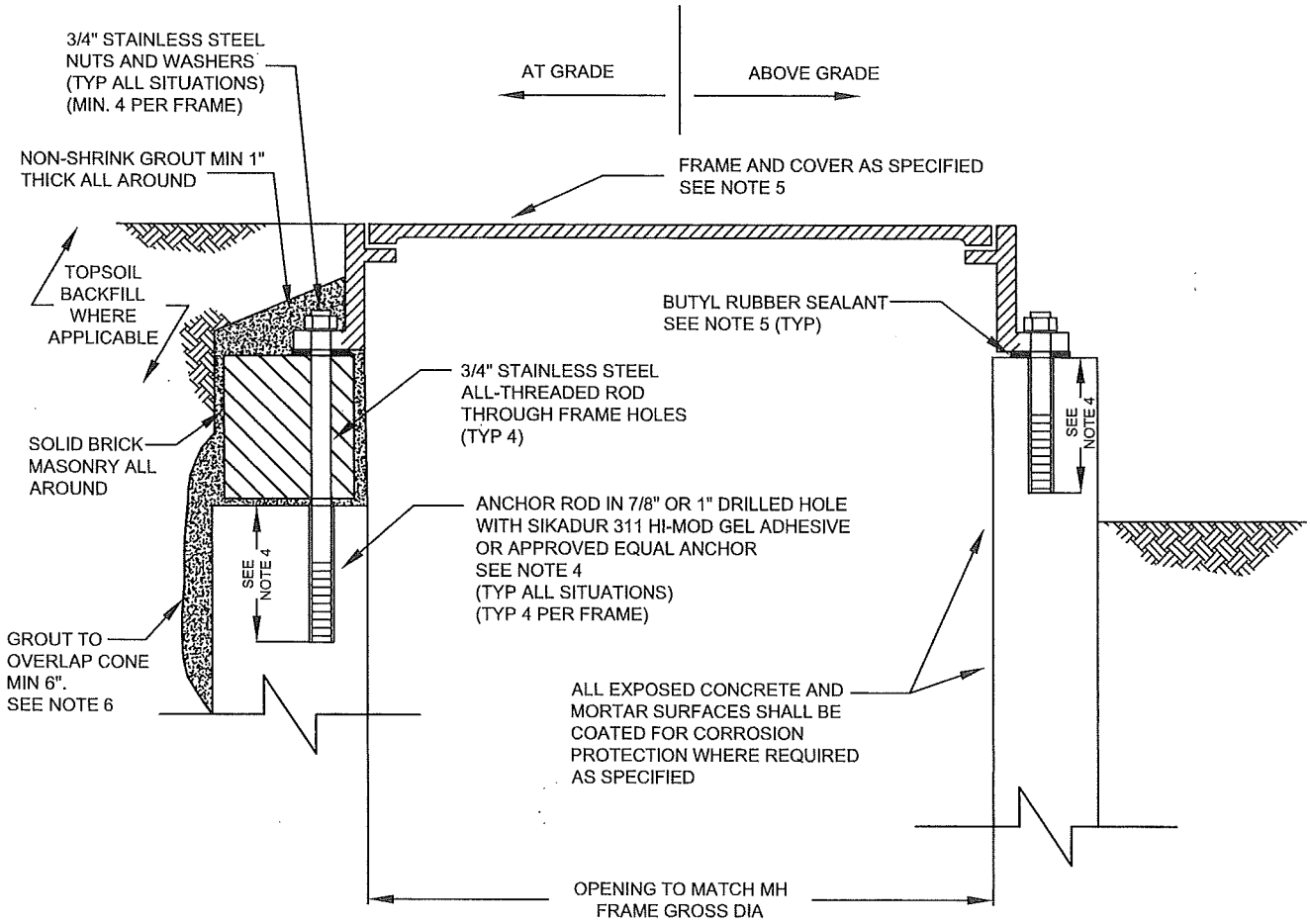

NOTES:

1. ALL FRAMES INSTALLED SHALL BE ANCHORED TO MANHOLE CONE SECTIONS PER THIS DETAIL. FOR FLAT TOP SECTIONS, THIS DETAIL ONLY APPLIES WHEN THE COVER IS TERMINATING FLUSH WITH THE GRADE (WHEN A NON-SLAB TYPE FRAME IS USED.

2. THIS DETAIL DEPICTS ANCHORING FRAMES AND COVERS TO CONE SECTION. THE DETAIL ALSO APPLIES TO FLAT TOP SECTIONS PER NOTE 1.

3. MANHOLE SECTIONS TO BE RESTRAINED WITH MANHOLE PRESSURE RESTRAINT SYSTEM SPECIFIED IN DETAIL NO. 102 WHENEVER ANCHORING WATERTIGHT FRAMES AND COVERS PER THIS DETAIL.

4. FOR FLAT-TOP SECTIONS, ANCHOR ROD MIN 3/4 OF THE SLAB THICKNESS. FOR CONE SECTIONS, ANCHOR ROD MIN 4" INTO CONE. SUBMIT PROPOSED ANCHORING TO ENGINEER FOR REVIEW AND APPROVAL

5. INSTALL BUTYL RUBBER (MASTIC) SEALANT UNDER FRAME-2 COMPLETE CIRCLES.

6. PARGE OVER TRANSITION BETWEEN TOP OF MASONRY AND FRAME.

TOWN OF THURMONT
FREDERICK COUNTY, MD

INSTALLATION OF MANHOLE FRAMES AND COVERS

No.	Date	By	Revision	Scale	Approved By	Date	DETAIL NO.
							107

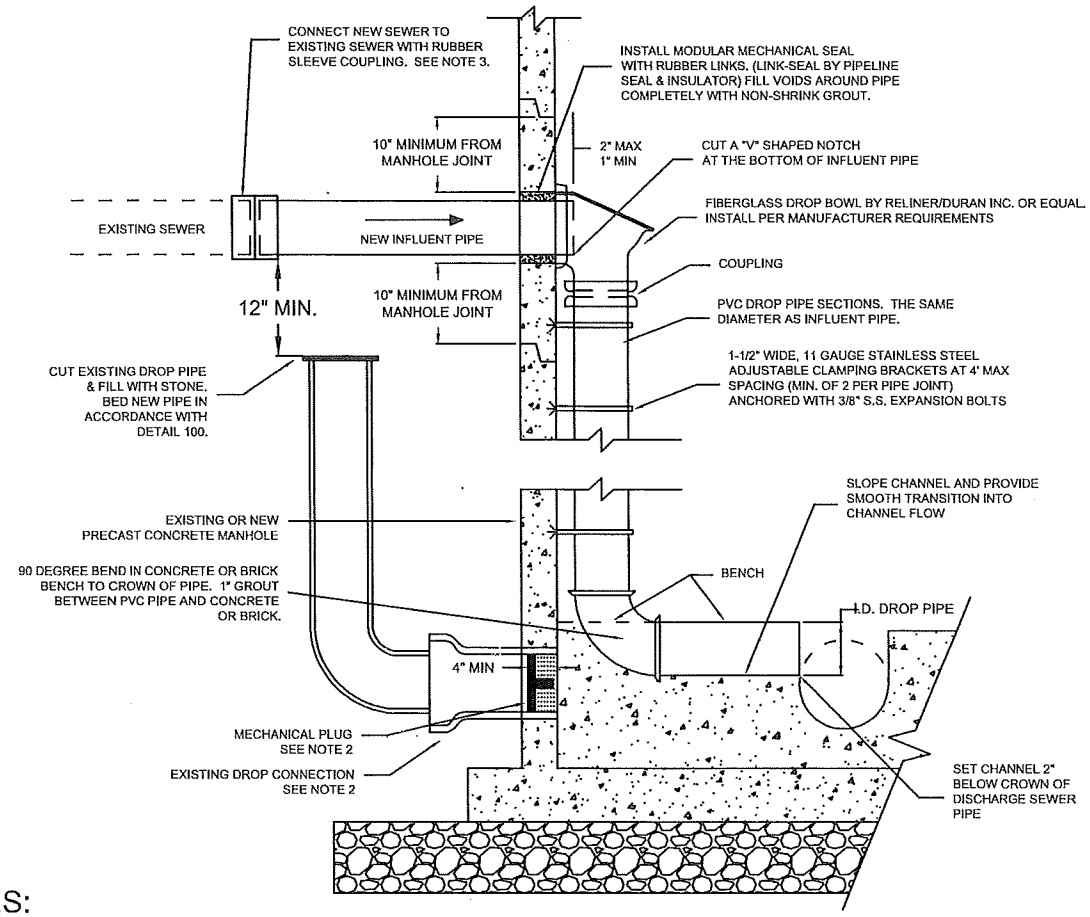

NOTES:

1. THE DROP BOWL SHALL NOT EXTEND INTO THE AREA THAT IS DEFINED BY THE PROJECTION OF THE MANHOLE ENTRANCE VERTICALLY DOWN TO THE MANHOLE BOTTOM. IF NECESSARY, MANHOLE FRAME, COVER, CONE SECTION, AND STEPS SHALL BE REMOVED AND PLACED TO ALLOW FOR UNOBSTRUCTED ENTRY AND EXIT.

2. WHEN INSIDE DROP CONNECTION REPLACES EXISTING OUTSIDE DROP, PROVIDE MECHANICAL PLUG AND FILL CAVITY SPACE WITH NON-SHRINK GROUT FLUSH WITH INSIDE FACE OF MANHOLE.

3. CONNECT SEWER TO EXISTING SEWER WITH RUBBER SLEEVE COUPLING WITH STAINLESS STEEL COMPRESSION BANDS AND SHEAR RINGS AS MANUFACTURED BY MISSION PRODUCTS OR EQUAL. COUPLING TO BE A MINIMUM OF 6" WIDE.

4. INSTALL NEW INFLUENT PIPE TO MATCH GRADE OF EXISTING SEWER AND PROVIDE POSITIVE DRAINAGE INTO MANHOLE.

5. USE THIS DETAIL ONLY WHEN THE DIFFERENCE BETWEEN THE TOP AND BOTTOM INVERT IS GREATER THAN 2.5 FEET.

TOWN OF THURMONT
FREDERICK COUNTY, MD

INSIDE DROP CONNECTION FOR PRECAST CONCRETE MANHOLES-DETAIL VIEW

No.	Date	By	Revision	Scale	Approved By	Date	DETAIL NO.
							109

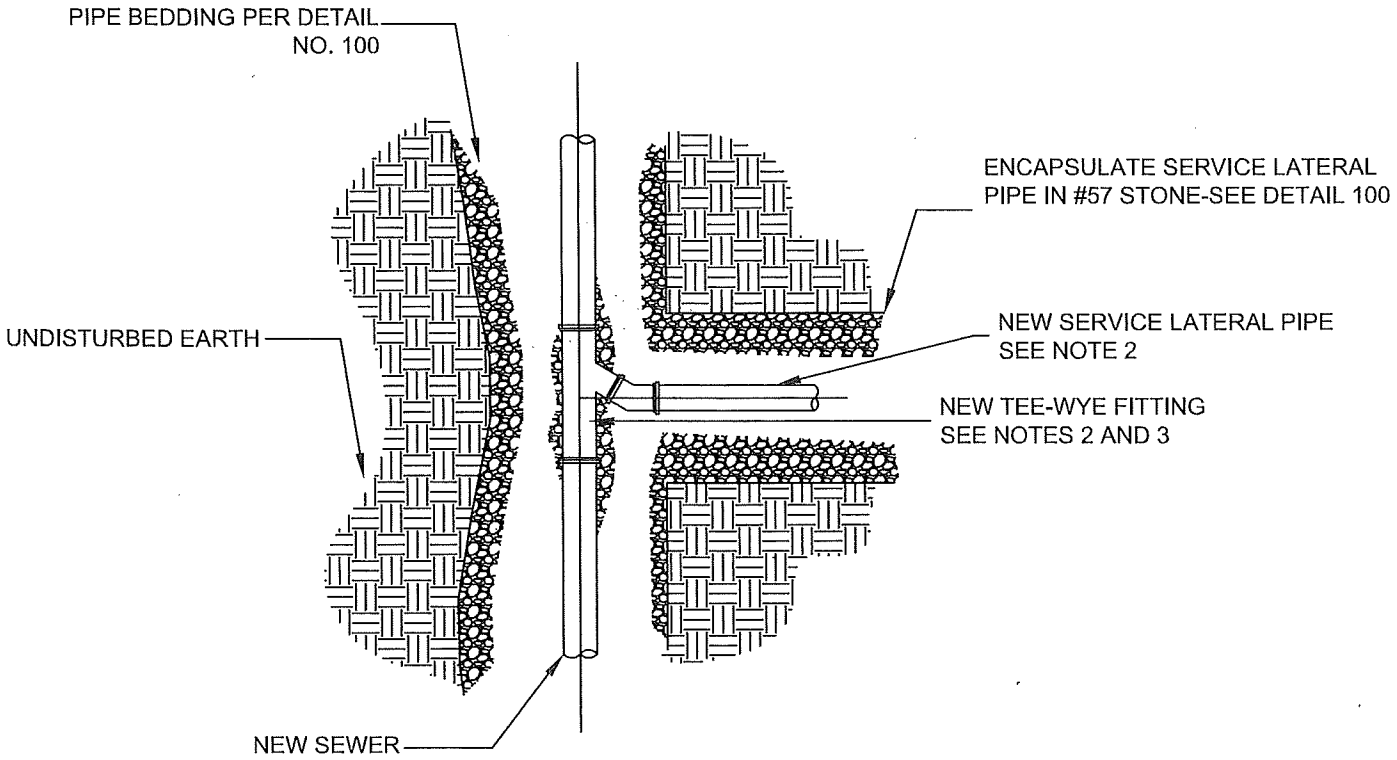

NOTES:

1. REFER TO THIS DETAIL WHEN CONNECTING NEW SERVICE LATERALS TO NEW SEWERS WITH A TEE-WYE FITTING. TEE-WYE CONNECTIONS ARE REQUIRE FOR CONNECTING NEW LATERALS TO NEW SEWERS. TEE-WYE FITTINGS SHALL BE INSTALLED AS THE NEW SEWER IS LAID TO SERVE ALL PROPERTIES. INSTALLING THE NEW SEWER AND THEN LATER TAPPING THE SEWER WITH A SADDLE CONNECTION SHALL NOT BE ALLOWED

2. INSTALL FITTINGS AND ADAPTERS AS NECESSARY TO CONNECT NEW TEE-WYE AND SERVICE LATERAL. 90° BENDS ARE NOT ALLOWED. NEW MAIN SEWER, TEE-WYE AND SERVICE LATERAL SHALL BE PVC UNLESS OTHERWISE APPROVED OR REQUIRED.

3. ROTATE NEW TEE-WYE 45 DEGREES FROM HORIZONTAL TO THE LEFT OR RIGHT AS APPROPRIATE AND INSTALL FITTINGS/BENDS AS NECESSARY TO ROUTE LATERAL ALONG DESIRED ELEVATION. SERVICES SHALL NOT ENTER THE TOP OF THE SEWER.

4. REFER TO DETAIL NO 112 FOR PROFILE VIEW OF THIS WORK.

TOWN OF THURMONT
FREDERICK COUNTY, MD

SERVICE LATERAL TEE-WYE CONNECTION TO NEW SEWER

No.	Date	By	Revision	Scale	Approved By	Date	DETAIL NO.
							110

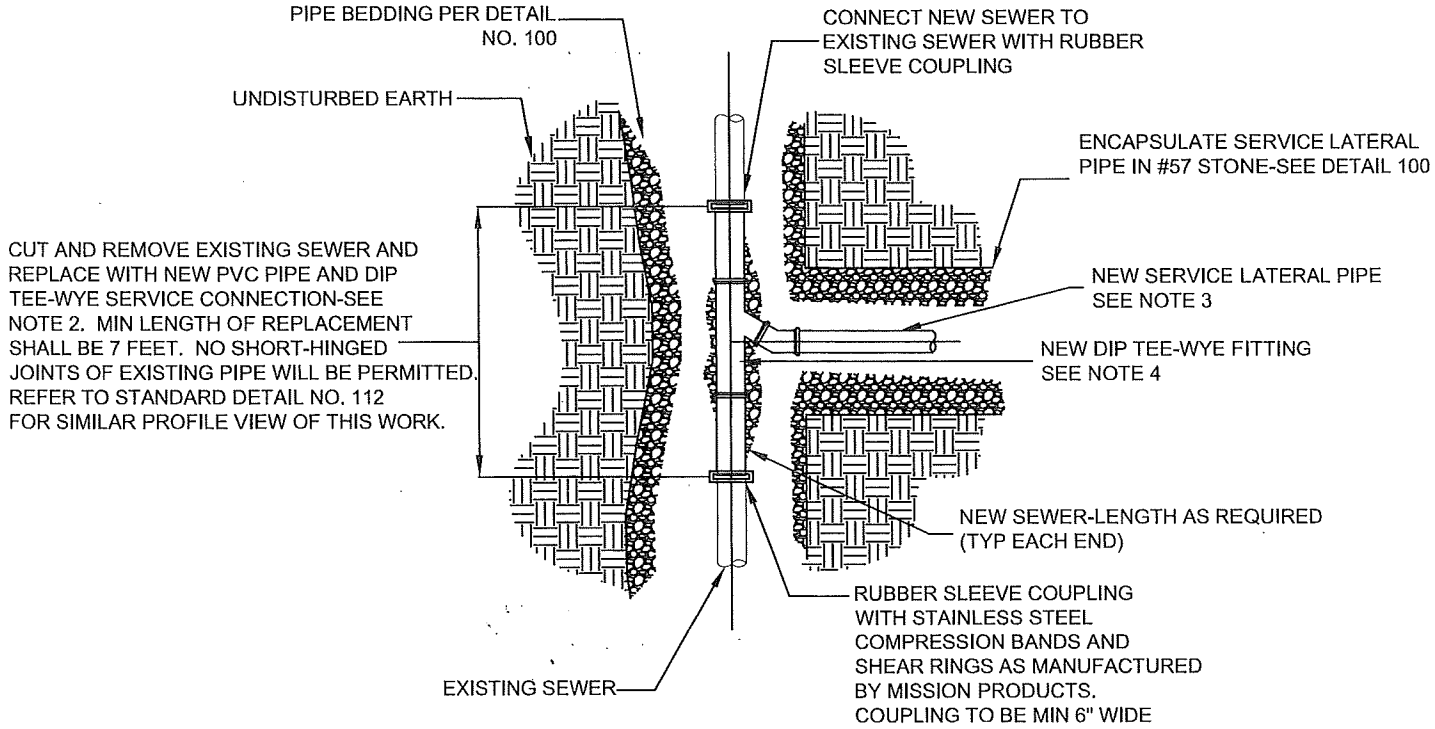

NOTES:

1. REFER TO THIS DETAIL WHEN CONNECTING NEW SERVICE LATERALS TO EXISTING SEWERS. SADDLE CONNECTIONS WILL NOT BE ALLOWED UNLESS DIRECTED BY THE ENGINEER.
2. INSTALL THE NEW SEWER AT A CONSTANT SLOPE BETWEEN THE TWO EXISTING PIPE ENDS.
3. INSTALL FITTINGS, ADAPTERS AND RUBBER SLEEVE COUPLINGS AS NECESSARY TO CONNECT NEW PIPE AS SHOWN. NEW TEE-WYE SHALL BE DIP. NEW SEWER MAIN SHALL BE PVC. NEW LATERALS AND TEE-WYE BRANCHES SHALL BE THE SAME SIZE AS THE EXISTING LATERAL. CONNECT MJ ON DIP TEE WYE TO NEW PVC PIPE WITH MJ x SDR35 TRANSITION GASKETS.
4. ROTATE NEW TEE-WYE 45 DEGREES FROM HORIZONTAL TO THE LEFT OR RIGHT AS APPROPRIATE AND INSTALL FITTINGS/BENDS AS NECESSARY TO ROUTE LATERAL ALONG DESIRED ELEVATION. 90° BENDS ARE NOT ALLOWED. SERVICES SHALL NOT ENTER THE TOP OF THE SEWER PIPE.
5. MAIN SEWER SHALL BE INSPECTED BY CONTRACTOR VIA CLOSED CIRCUIT TELEVISION (CCTV) AFTER INSTALLATION OF LATERAL TO VERIFY PROPER ALIGNMENT OF NEW SEWER AND PROPER CONNECTION TO EXISTING SEWER. ANY OFFSET JOINTS OR MISALIGNMENT SHALL BE CORRECTED PRIOR TO ACCEPTANCE BY TOWN. THE CCTV INSPECTION TAPE AND LOG SHALL BE SUBMITTED TO TOWN FOR REVIEW AND APPROVAL AND SHALL CLEARLY SHOW EACH PIPE CONNECTION AND THE SERVICE LATERAL. APPROVAL MUST BE RECEIVED PRIOR TO THE INSTALLATION OF ANY CIPP ON A PARTICULAR SEWER LINE.
6. REFER TO DETAIL NO. 112 FOR PROFILE VIEW OF THIS WORK.

TOWN OF THURMONT
FREDERICK COUNTY, MD

SERVICE LATERAL TEE-WYE CONNECTION TO EXISTING SEWER

No.	Date	By	Revision	Scale	Approved By	Date	DETAIL NO.
							111

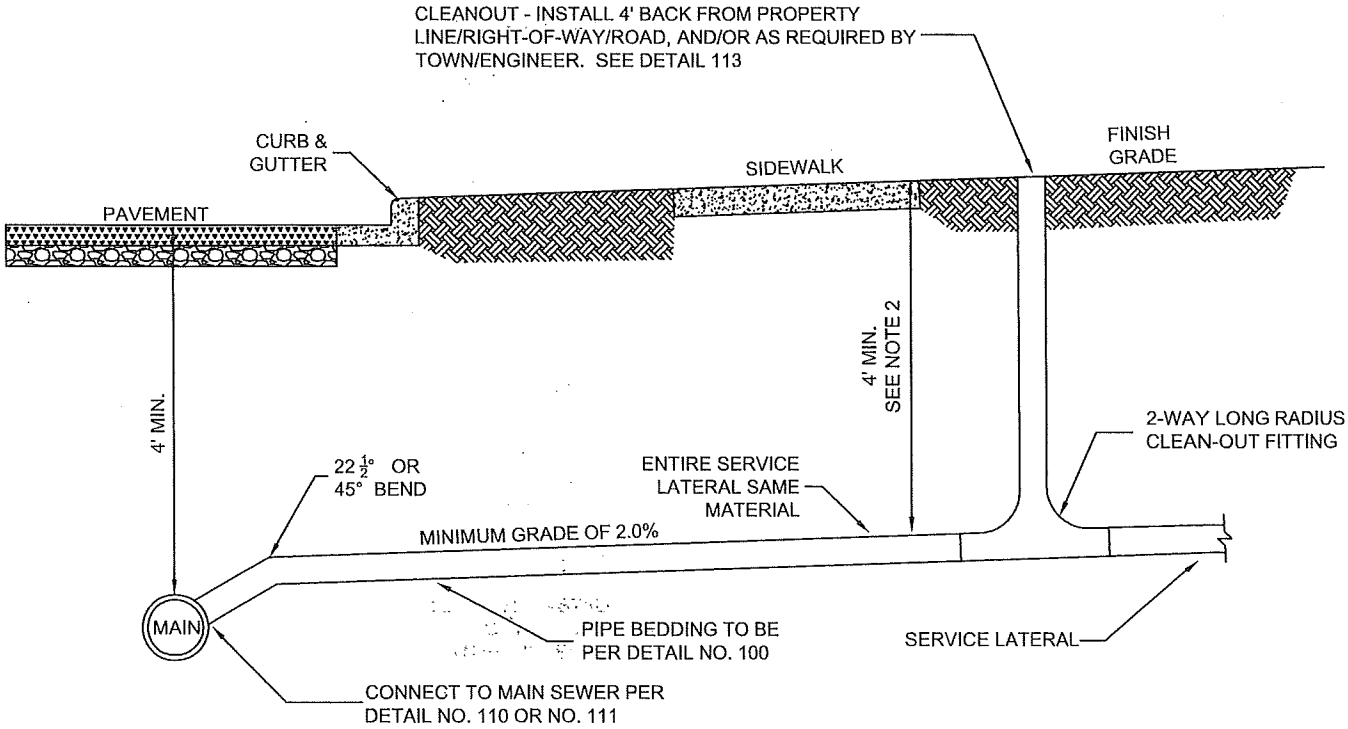

NOTES:

1. THIS DETAIL ILLUSTRATES A TYPICAL SERVICE LATERAL INSTALLATION FROM THE MAIN SEWER (EITHER NEW OR EXISTING)TO THE PROPERTY LINE OR EDGE OF THE ROAD/SEWER RIGHT-OF-WAY.

2. WHEN SERVICE LATERALS ARE INSTALLED TO THE HOUSE OR BUSINESS, THE NEW LATERAL SHALL REMAIN AT A MINIMUM SLOPE OF 2% AND SHALL MAINTAIN AT LEAST 4 FEET OF COVER WITHIN THE ROAD R/W. THERE IS NO SPECIFIED MINIMUM DEPTH OF COVER FOR LATERALS ONCE THEY ENTER PRIVATE PROPERTY BUT A MINIMUM OF 3' OF COVER IS RECOMMENDED. PIPE TYPES MAY NOT CHANGE FROM THE MAIN SEWER TO THE HOUSE/BUILDING UNLESS TOWN/ENGINEER APPROVES OTHERWISE.

3. IF 4 FEET OF COVER CAN NOT BE PROVIDED WITHIN THE ROAD R/W, SPECIAL INSTALLATION MAY BE REQUIRED BY TOWN/ENGINEER OR MDSHA.

4. CLEANOUTS SHALL BE INSTALLED AT ALL BENDS IN THE LATERAL, AT LEAST EVERY 75 FEET AND/OR AS REQUIRED BY TOWN/ENGINEER. CLEANOUTS SHALL BE IN ACCORDANCE WITH DETAIL 113.

5. REFER TO OTHER REFERENCED DETAILS FOR ADDITIONAL REQUIREMENTS.

				TOWN OF THURMONT FREDERICK COUNTY, MD			
				STANDARD SERVICE LATERAL INSTALLATION			
No.	Date	By	Revision	Scale	Approved By	Date	DETAIL NO. 112

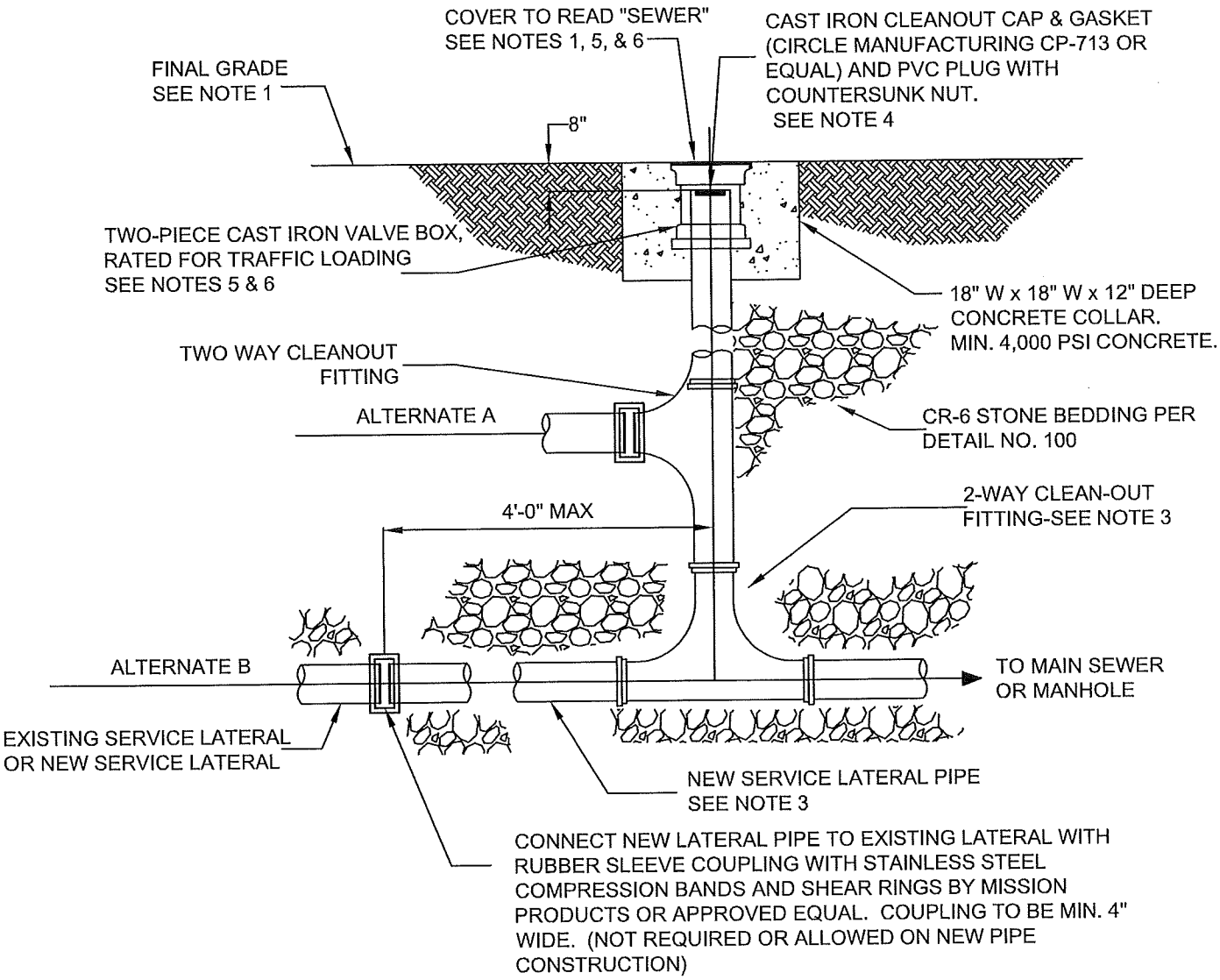

NOTES:

1. CLEANOUT COVER TO BE FLUSH WITH THE FINAL GRADE.
2. LOCATION OF CLEANOUT TO BE FIELD APPROVED BY TOWN/ENGINEER. CLEANOUTS SHALL BE INSTALLED AT ALL BENDS IN THE LATERAL, AT LEAST EVERY 75 FEET AND/OR AS REQUIRED BY TOWN/ENGINEER.
3. LATERAL PIPE AND FITTINGS SHALL BE THE SAME PIPE MATERIAL UNLESS APPROVED OTHERWISE BY TOWN/ENGINEER.
4. ALTERNATE CLEANOUT CAPS MUST BE APPROVED BY TOWN/ENGINEER.
5. VALVE BOXES SHALL BE GRAY IRON CONFORMING TO ASTM A48 CLASS 35 AND SHALL BE FULLY BITUMINOUS SEAL COATED, MIN. LENGTH OF TOP SECTION TO BE 16 INCHES.
6. INSTALL AN 18" X 18" CONCRETE COLLAR (MIN. 2500 PSI CONCRETE, 6" THICK) AROUND ALL CAST IRON VALVE BOXES LOCATED IN ANY ASPHALT OR CONCRETE PAVED AREA.
7. FOR GRASSED AREAS, 4,000 PSI CONCRETE COLLAR AND THE 2-PIECE CAST IRON VALVE BOX ARE NOT REQUIRED.
8. FOR EITHER ALTERNATE A OR B LOCATIONS FOR HOUSE SEWER CONNECTION, THE MINIMUM DEPTH BELOW FINISHED GRADE SHALL BE 3'.

TOWN OF THURMONT
FREDERICK COUNTY, MD

TYPICAL CLEANOUT DETAILS

No.	Date	By	Revision	Scale	Approved By	Date	DETAIL NO.
							113

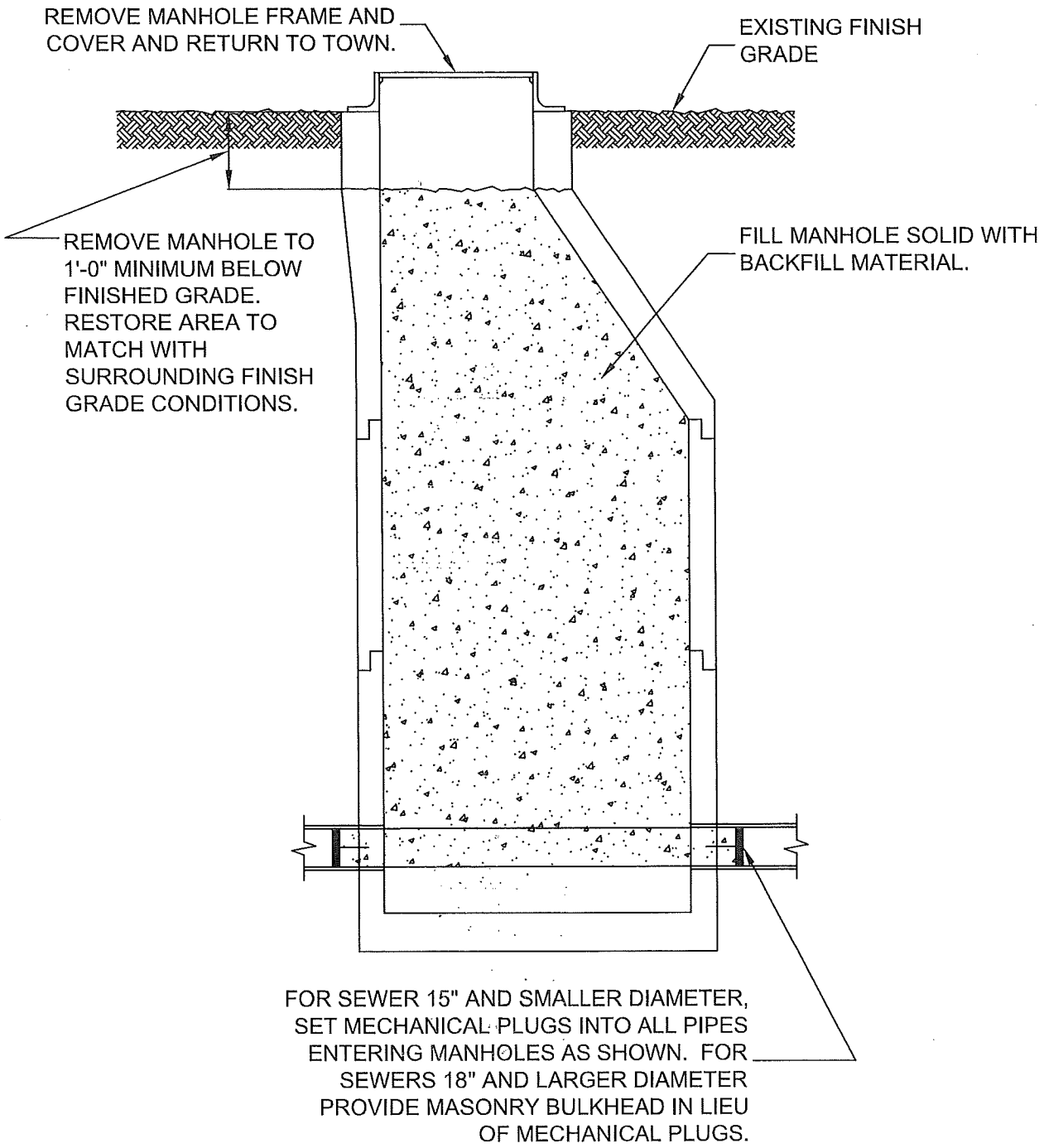

TOWN OF THURMONT
FREDERICK COUNTY, MD

COMPLETE MANHOLE ABANDONMENT

No.	Date	By	Revision	Scale	Approved By	Date	DETAIL NO.
							114

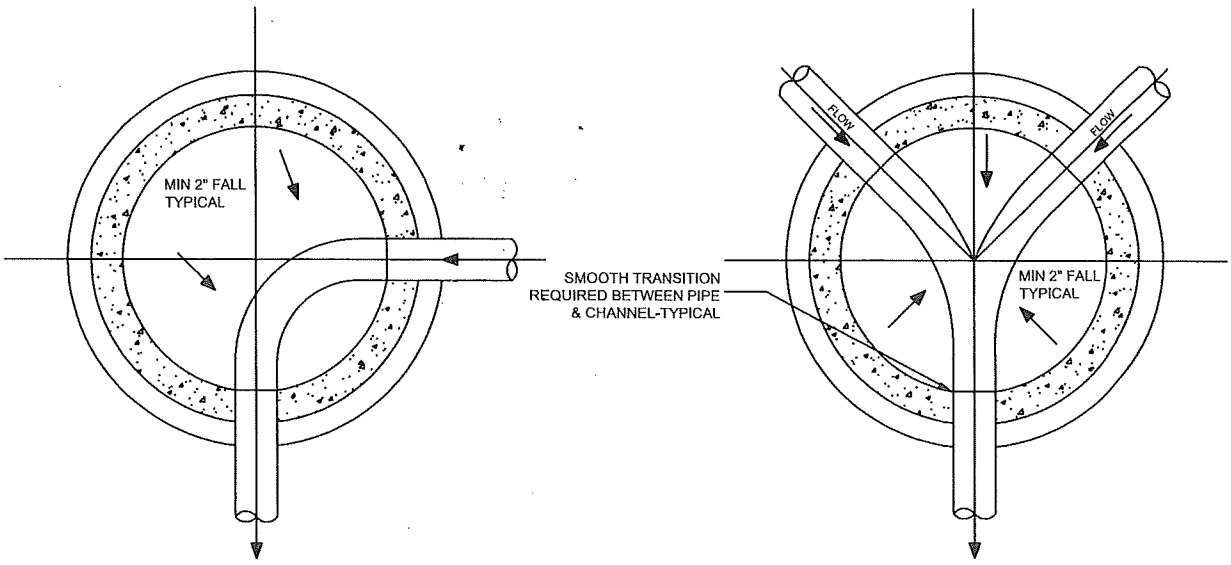

CHANNEL LINING NOTES:

1. BENCHING & INVERT CHANNELS SHALL BE PRECAST BY THE MANHOLE MANUFACTURER UNLESS DIRECTED OTHERWISE BY ENGINEER. BENCHING AND CHANNELS SHALL BE CONSTRUCTED OF MINIMUM 4,000 PSI CONCRETE WITH FIBER REINFORCING.
2. WIDTH OF CHANNEL SHALL MATCH INSIDE DIAMETER OF INCOMING AND OUTGOING PIPES. BLEND CHANNEL LINING FOR SMOOTH CONTOUR BETWEEN PIPES.
3. ALL INVERT ELEVATIONS SHALL BE AS SHOWN ON THE DRAWINGS.
4. AT LEAST 2 INCHES OF FALL SHALL BE PROVIDED ON THE BENCHING FROM THE MANHOLE WALLS TO THE TOP EDGE OF THE INVERT CHANNEL.

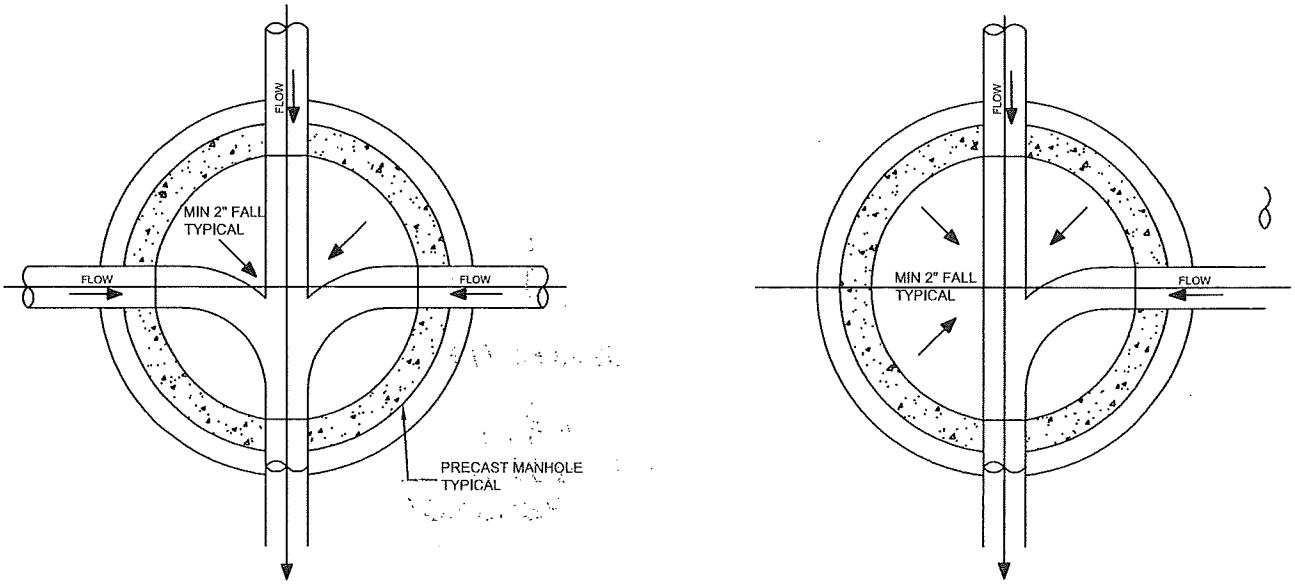

				TOWN OF THURMONT FREDERICK COUNTY, MD			
				PLAN OF TYPICAL CHANNELIZATION OF SEWER MANHOLES			
							DETAIL NO.
No.	Date	By	Revision	Scale	Approved By	Date	115

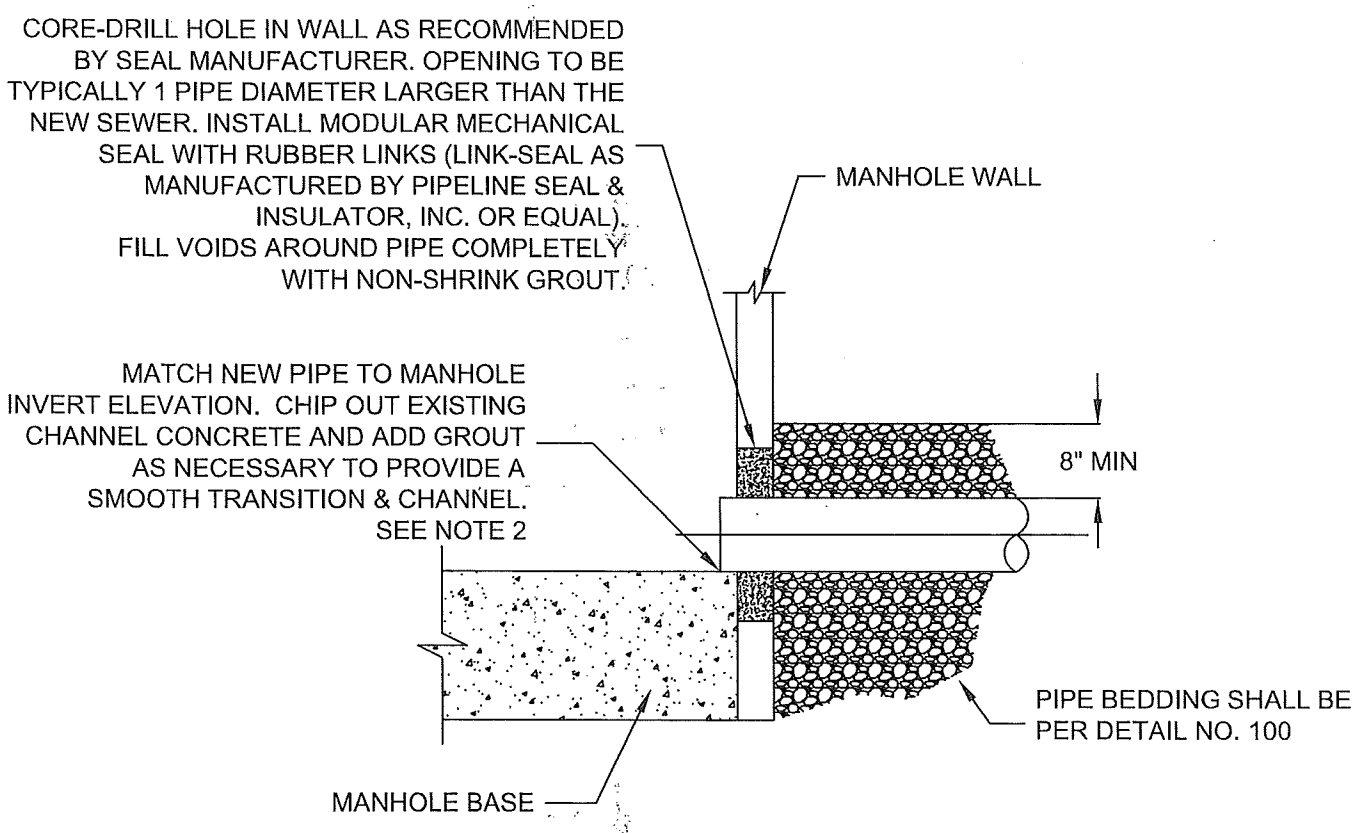

NOTES:

1. REFER TO THIS DETAIL WHEN CONNECTING NEW SEWER PIPES (INCLUDING SERVICE LATERALS) TO EXISTING MANHOLES OR NEW MANHOLES WHERE FLEXIBLE COUPLINGS ARE NOT USED.

2. THIS DETAIL DEPICTS THE NEW SEWER ENTERING AT THE EXISTING INVERT ELEVATION. THIS WILL NOT BE THE CASE FOR ALL MAIN SEWERS. PROVIDE A SMOOTH TRANSITION AND INVERT CHANNEL FOR ANY INCOMING ELEVATION PER DETAIL NO. 115.

   PROVIDE AN INVERT CHANNEL ON THE BENCH PER DETAIL NO. 115.

TOWN OF THURMONT
FREDERICK COUNTY, MD

NEW PIPE CONNECTION AT MANHOLE

							DETAIL NO.
No.	Date	By	Revision	Scale	Approved By	Date	116

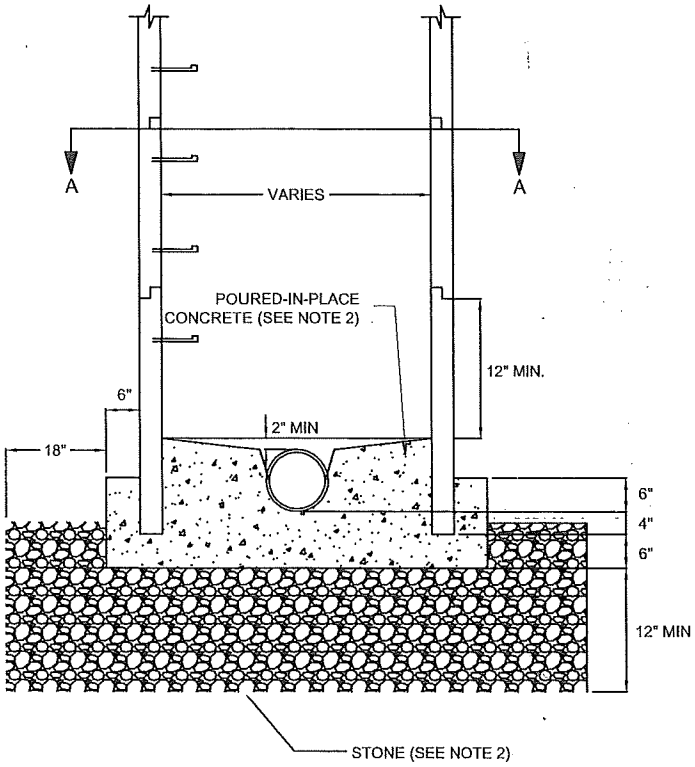

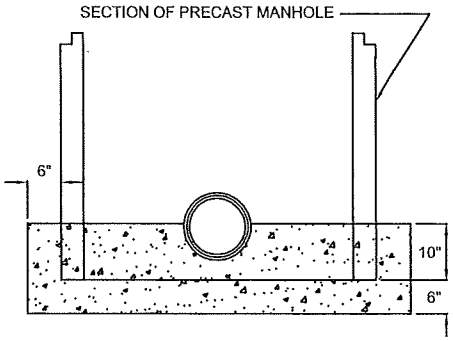

SECTION B-B

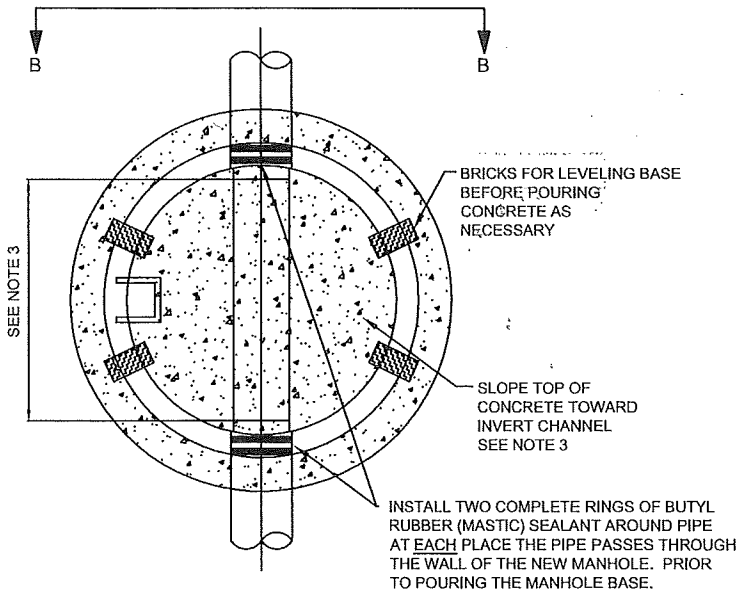

SECTION A-A

NOTES:

1. REFER TO DETAIL NO. 101 FOR MANHOLE REQUIREMENTS.

2. DIG OUT DITCH AND PREPARE STONE BEDDING. POUR CONCRETE FOOTING AND SET DOGHOUSE MANHOLE IN WET CONCRETE. BUILD BENCH AND FULL INVERT CHANNEL. CONCRETE SHALL BE 4,000 PSI FIBER-REINFORCED CONCRETE. REFER TO DETAIL NO. 115.

3. NEATLY SAW-CUT THE EXISTING SEWER 2" INSIDE THE NEW MANHOLE WALLS AND 1/2 WAY DOWN THE EXISTING PIPE. THEN FORM CONCRETE BENCH AND FULL INVERT CHANNEL. SEE DETAIL NO. 115.

4. AFTER BENCH AND INVERT ARE FORMED BUT BEFORE MANHOLE IS BACKFILLED, CONTRACTOR SHALL USE NON-SHRINK GROUT TO COMPLETELY FILL IN AND SMOOTH WALLS INSIDE AND OUTSIDE OF MANHOLE AROUND ALL PIPE ENTRIES/EXITS.

TOWN OF THURMONT
FREDERICK COUNTY, MD

PRECAST DOGHOUSE MANHOLE
INSTALLED OVER EXISTING SEWER

No.	Date	By	Revision	Scale	Approved By	Date	DETAIL NO.
							117

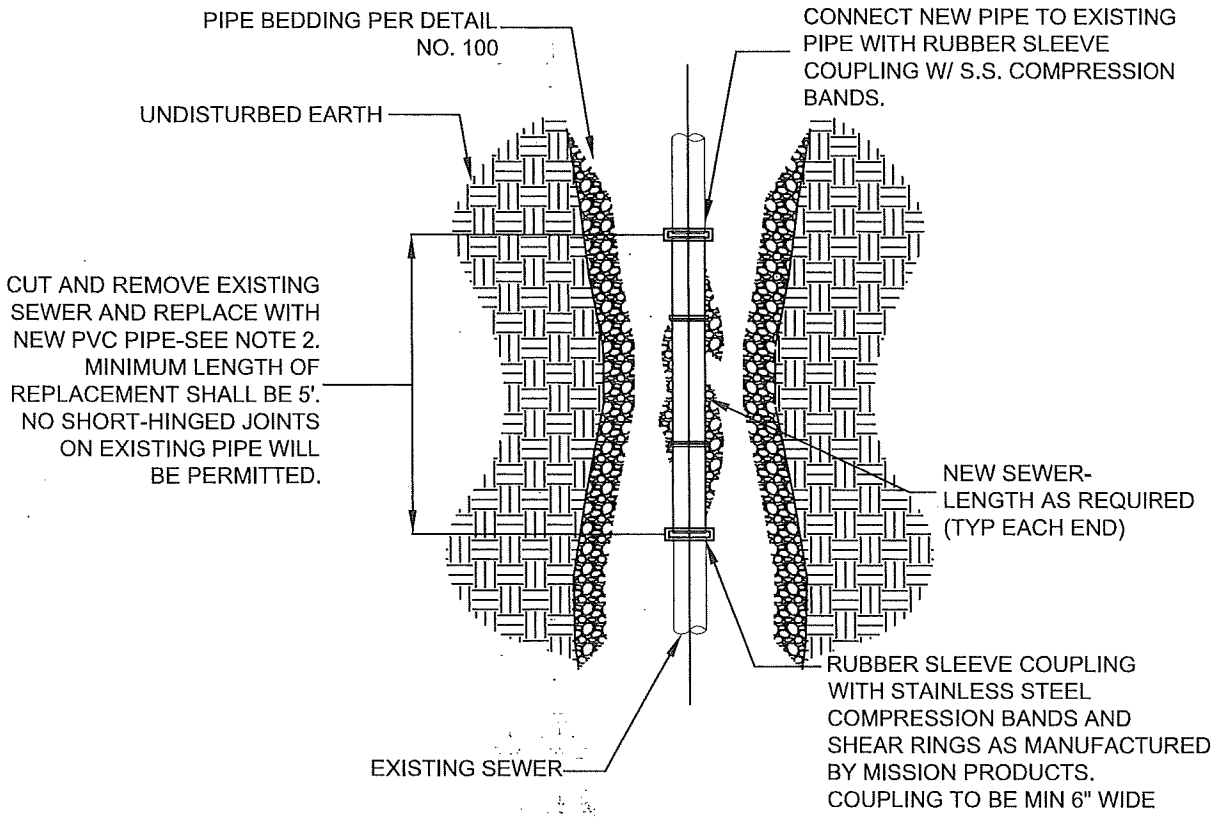

NOTES:

1. REFER TO THIS DETAIL WHEN CONNECTING POINT REPAIRS TO EXISTING SEWERS.
2. INSTALL THE NEW PIPE AT A CONSTANT SLOPE BETWEEN THE TWO EXISTING PIPE ENDS.
3. INSTALL RUBBER SLEEVE COUPLINGS AS NECESSARY TO CONNECT NEW PIPE AS SHOWN. MAIN SEWER POINT REPAIR PIPE SHALL BE PVC PIPE SIZED TO MATCH EXISTING SEWER PIPE.
4. MAIN SEWER SHALL BE INSPECTED BY CONTRACTOR VIA CLOSED CIRCUIT TELEVISION (CCTV) AFTER INSTALLATION OF POINT REPAIR TO VERIFY PROPER ALIGNMENT OF NEW SEWER AND PROPER CONNECTION TO EXISTING SEWER. ANY OFFSET JOINTS OR MISALIGNMENT SHALL BE CORRECTED PRIOR TO ACCEPTANCE BY TOWN. THE CCTV INSPECTION TAPE AND LOG SHALL BE SUBMITTED TO TOWN FOR REVIEW AND APPROVAL AND SHALL CLEARLY SHOW EACH POINT REPAIR. APPROVAL MUST BE RECEIVED FROM ENGINEER PRIOR TO THE INSTALLATION OF ANY CIPP ON A PARTICULAR SEWER LINE.

TOWN OF THURMONT
FREDERICK COUNTY, MD

POINT REPAIR
TO EXISTING SEWER

No.	Date	By	Revision	Scale	Approved By	Date	DETAIL NO.
							118

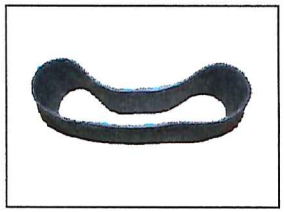

Fig. 1

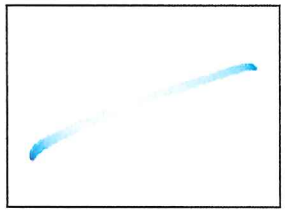

Fig. 2

Fig. 3

Fig. 4

Fig. 5

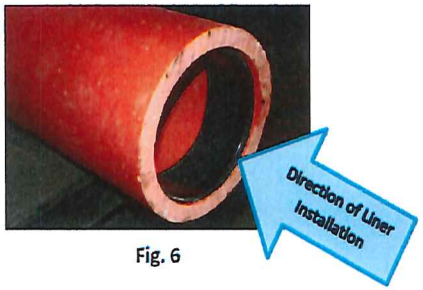

Fig. 6

The Insignia™ End Seal Kit contains the following materials:

1. Insignia™ Hydrophilic End Seal (Fig. 1)
2. Metal Retaining Ring with Adhesive Tape (Fig. 2)

For the installation of an Insignia™ End Seal, the procedure below must be followed:

1. The interior pipe surface is prepared by thoroughly cleaning it using a high pressure water jet
2. The blue backing of the adhesive tape on the Insignia™ End Seal Retaining Ring is peeled off
3. The Metal Retaining Ring is carefully placed around the interior of the End Seal such that the adhesive side of the clip adheres to the inside of the seal (Fig. 3 & 4)
4. The Insignia™ End Seal is then inserted into the pipe such that the Metal Retaining Ring is on the leading edge of the seal. (Fig. 5) Note: It is very important that the Insignia™ End Seal be installed in such a way that the Metal Retaining Ring is positioned on the end of the seal through which the CIPP will be inverted (Fig. 6)
5. Once the CIPP Liner has been inverted through the pipe, the Insignia™ End Seal gets embedded between the lining and the host pipe.

Town of Thurmont
Frederick County , MD

Insignia End Seal for LMK Technologies Installation for CIPP Pipe Seal at Manhole

No.	Date	By	Revision	Scale	Approved By	Date	DETAIL NO.
							120

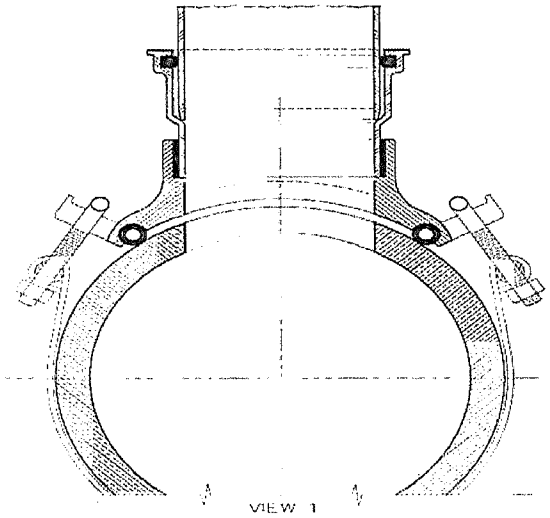

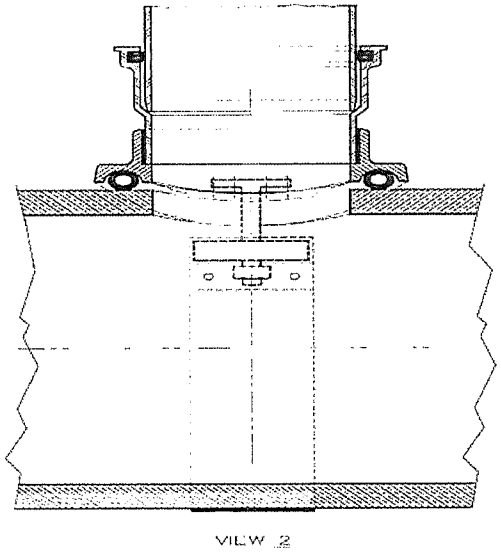

INLET: GASKETED BELL - SDR 35 PVC

Base Casting is ASTM A 48 Class 30 Cast Iron
(Various Contours available to fit 6.275" - 30.00" O.D. Mains)

PVC Adapter is an ASTM D3034, SDR-35 Gasketed Bell

Adapter is cemented permanently in place with two-part urethane adhesive

Base of Saddle is dip-coated in a Waterbased Bituminous Coating

Strap is 24 ga. x 2.5" wide Type 304 Stainless Steel

Strap Pins are .75" dia. Type 303 Stainless Steel

T-Bolts are .375" - 16 Type 304 Stainless Steel

Nuts and Washers are Type 18-8 Stainless Steel

O-Ring is ASTM C-361 77 Tubular Polyisoprene

4" inlet requires a 4" dia. Tap in the Sewer Main

6" inlet requires a 6" dia. Tap in the Sewer Main
(Sewer Main must be at least 8" dia.)

Note: This Dwg. supercedes Dwg. No. R-3408-D2

Notes:

1. Tapping Saddle to be Geneco Sealtite Type U or F as specified.
2. Hole for Sewer Connection to Machine Tapped Only
3. Angle of Tap to be Determined in the Field.
4. Host pipe to be Completely Removed and Cleaned Before Installation.
5. Before Backfill Encase Liner and Saddle in Grout.
6. After Installation and backfill LMK Stubby CIP Connection is to be Done.

Town of Thurmont
Frederick County , MD

Service Lateral Connection to CIP Lined Sewers

No.	Date	By	Revision	Scale	Approved By	Date	DETAIL NO.
							121

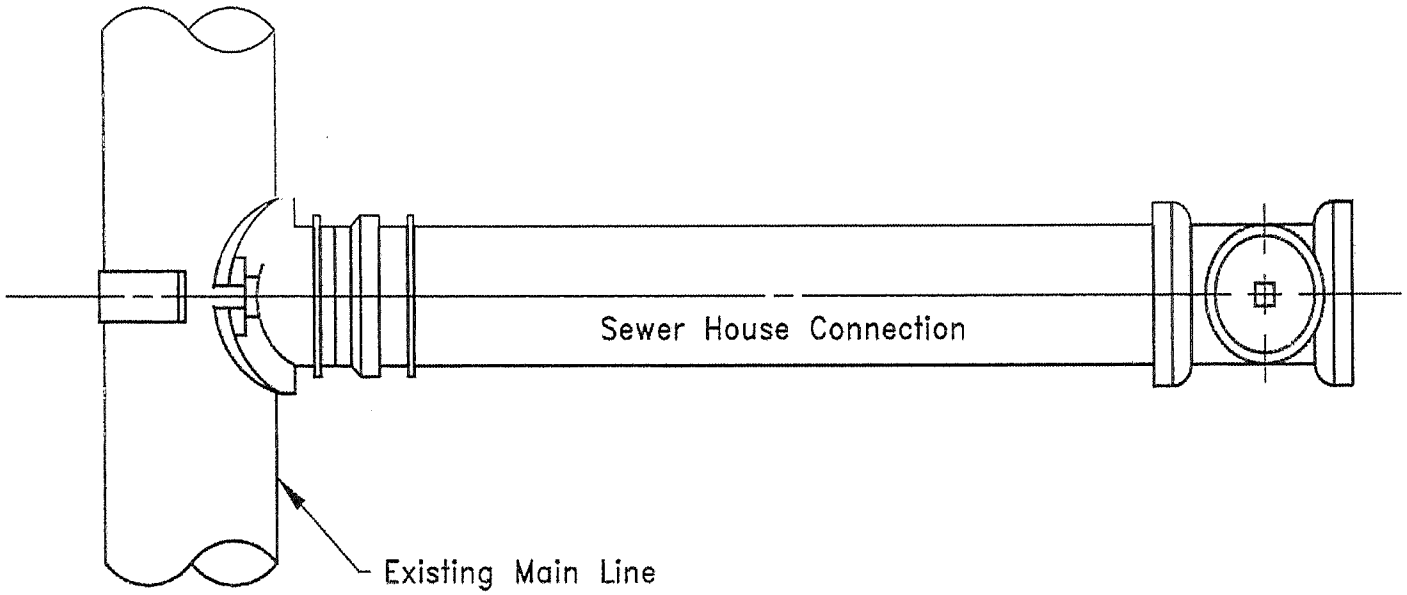

Notes:

1. SDR 35 PVC Pipe to be Used unless Specified
2. New SDR 35 PVC Pipe to extend to 4' behind Property Line or ROW
3. New Two Way CO to be Placed 4' behind Property Line or ROW

Town of Thurmont
Frederick County , MD

Service Lateral Connection to Exsisting CIP Lined Sewer

No.	Date	By	Revision	Scale	Approved By	Date	DETAIL NO.
							122

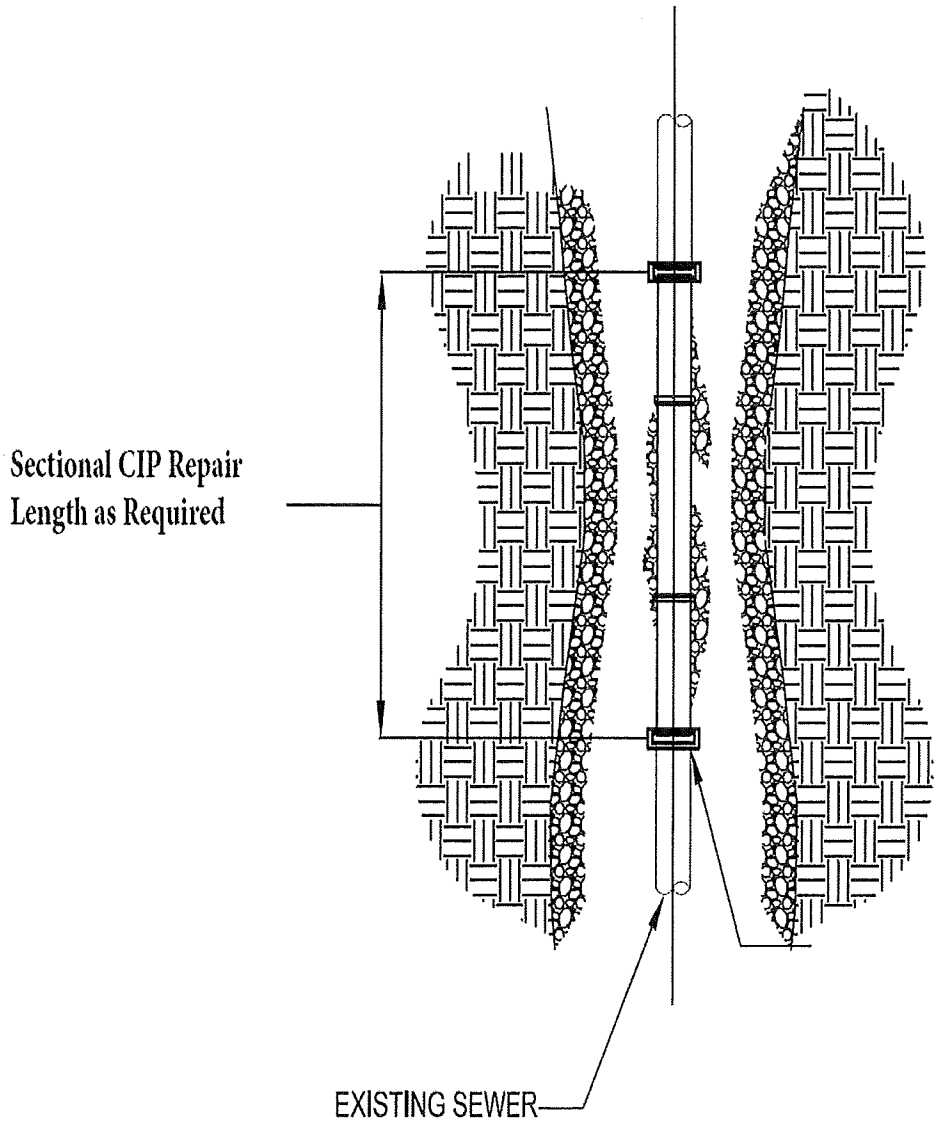

Notes:

1. Repair CIP liner to Extend Min 2' Past Damaged Pipe Each Way
2. Repair CIP Liner to have 2 Hydrophillic O rings Installed on Each End
3. Repair to be Performed by Certified Lining Company

				Town of Thurmont Frederick County , MD			
				Sewer Main Repair on CIP Lined Pipe			
							DETAIL NO.
No.	Date	By	Revision	Scale	Approved By	Date	123

Town of Thurmont Sanitary Sewer System

Standard Specification Section Table of Contents

Section No.	Title
02010	SEDIMENT AND EROSION CONTROL
02040	MAINTENANCE OF TRAFFIC
02200	EXCAVATION, BACKFILL, AND COMPACTION
02600	DUCTILE IRON GRAVITY SEWER PIPE AND FITTINGS
02610	PVC GRAVITY SEWER PIPE AND FITTINGS
02650	CURED-IN-PLACE PIPE LINING (CIP)
02700	PRECAST CONCRETE MANHOLES
02750	MANHOLE REHABILITATION
02760	MAINTENANCE OF SEWER FLOW
02765	TELEVISION INSPECTION
02767	SEWER LINE CLEANING
02900	RESTORATION OF PAVED AND GRASSED AREAS
03300	CONCRETE AND GROUTS

SECTION 02010
SEDIMENT AND EROSION CONTROL

PART 1: GENERAL

1.01 DESCRIPTION

Work required by regulations to prevent soil erosion and control sedimentation during Work on the Project.

1.02 RELATED SECTIONS

A. Section 02200 – Excavation, Backfill and Compaction
B. Section 02900 – Restoration of Paved and Grassed Areas

1.03 SUBMITTALS

A. **Sediment and Erosion Control Plan**

(1) The requirements of the Sediment and Erosion Control Plan are given in the following Articles of this Section. Construction details for various Sediment and Erosion Control measures are shown on the Drawings.

(2) This work shall consist of the installation of both structural and vegetative erosion and sediment control practices as indicated on the Plans. The practices shall include, but are not limited to, inlet protection, crushed stone, filters or other approved methods indicated on the Plans.

(3) Erosion and sediment control measure shall be implemented any time that land is disturbed by construction activities including clearing, grading, excavating, stripping, filling or related work unless exempt by State law or local ordinance.

(4) Application of erosion and sediment control measures shall be coordinated with the construction of permanent sewer facilities to insure effective control of erosion from the construction site.

1.04 REGULATORY REQUIREMENTS

A. The sediment and erosion control measures are subject to inspection by State, County and local regulatory agencies. The Contractor shall be fully responsible for constructing and maintaining the sediment and erosion control measures to the extent that they are, at all times, acceptable to the regulatory agencies. The Contractor shall be liable for payment of any fines or legal costs that the Town of Thurmont may incur as a result of the Contractor's failure to properly construct and maintain the sediment and erosion control measures.

B. The objective of the "Sediment and Erosion Control Plan" is the protection of private property. To assist any damaged property owners in redress of grievances, the following stipulations are made.

(1) Any silt, sediment, or mud leaving the construction site will be construed as damage to neighboring property and evidence of negligence on the part of the Contractor.

(2) Any damages claimed by neighboring property owners will be rectified and restitution made by the Contractor.

C. Comply with the *1994 Maryland Standards and Specifications for Soil Erosion and Sediment Control*, published jointly by the Water Resources Administration, Soil Conservation Service and State Soil Conservation Committee.

D. Comply with any local laws, codes and regulations concerning the construction and maintenance of sediment and erosion control measures.

E. The contractor shall not utilize any offsite areas for obtaining borrow material or for depositing spoil material unless those areas have an approved erosion and sedimentation control plan and all current permits as may be required by state law or local ordinance.

1.05 SEQUENCE OF WORK

A. Install all sediment and erosion control measures prior to start of clearing operations.

B. Perform sediment and erosion control work in accordance with details and notes on the Contract Drawings.

PART 2: PRODUCTS (Not Applicable to this Section)

PART 3: EXECUTION

3.01 GENERAL SEDIMENT AND EROSION CONTROL METHODS/PROCEDURES

A. In all cases, the smallest practical area of land surface shall be disturbed. Contractor shall only uncover the amount of pipe they will be able to replace and backfill in a day. No material shall be stored on site. Excess and/or unsuitable material shall be trucked off at the end of each workday.

B. Topsoil shall be kept separate from all other materials. Temporary stockpiles of topsoil left at the end of the day need to be stabilized until the next redisturbance.

C. Excavated material shall be placed up slope from the excavation whenever possible. Runoff from spoil piles shall be directed through a sediment filter structure and discharged in a non-erosive manner. Temporary stockpiles of excavation material left at the end of the day need to be stabilized until the next redisturbance.

D. Dewatering equipment discharge shall be directed onto a stabilized surface so erosion does not occur. Discharges shall be directed through a sediment filter structure or sedimentation basin and discharged in a non-erosive manner.

E. Backfilled excavations shall be restored to original type of cover and grade in accordance with Specifications. Temporary stabilization is required for any and all erodible/soluble areas within 14 days.

F. Areas to be seeded or sodded shall be finish graded with six inches of topsoil unless otherwise specified. Positive drainage shall be maintained away from all structures. No isolated low spots shall be created.

G. All sediment shall be prevented from entering any storm drain, ditch or water course through use of a sediment filter structure.

H. Construction access from unpaved areas to paved areas or streets (public or private) shall be via a stabilized construction entrance. The entrance shall be maintained in a condition, which will prevent tracking or flowing of sediment onto the paved surface. Sediment spilled, dropped or tracked on paved surface shall be removed immediately.

3.02 SPECIFIC SEDIMENT AND EROSION CONTROL PROCEDURES

A. Clearing/Grubbing

(1) Upstream diversion facilities shall be constructed and operational prior to removal of vegetation from Project areas. This system shall divert surface runoff away from the construction area.

(2) A temporary diversion and collection system shall be provided at the downstream limits of all areas to be stripped. This facility shall be in place and functional prior to stripping operations. This system shall collect sediment-carrying water from the construction area and convey it to temporary or permanent sediment traps for non-erosive discharge onto stabilized areas.

(3) Temporary and permanent sediment traps and discharge structures shall be located such that all surface water leaving the construction area passes through them.

B. Stockpiles

(1) No stockpiling allowed on asphalt.

(2) All temporary stockpiles left at the end of the day need to be stabilized until the

next redisturbance.

C. **Dewatering Operations**

(1) Dewatering equipment discharge shall be directed onto a stabilized surface so erosion does not occur. Discharges shall be directed through a sediment filter structure or sedimentation basin and discharged in a non erosive manner.

D. **Temporary Sediment Traps for Storm Drain Inlets**

(1) Traps shall be installed where there is a possibility of runoff from the construction area entering existing storm drain inlets.

(2) Sediment traps shall be inspected after each rain and maintained in a functional condition at all times during the construction period. When the structure does not drain completely within 48 hours after a storm, it is clogged. When this occurs, accumulated sediment must be removed, and the geotextile fabric and stone must be cleaned or replaced.

(3) Traps shall be removed when contributing drainage areas are stabilized.

E. **Silt Fence Sediment Barrier**

(1) Silt fence sediment barrier shall be used to filter sediment from runoff.

(2) Sediment barriers shall be inspected after each rain and repaired as required to maintain proper function.

(3) Remove sediment behind barrier whenever sediment deposit reaches depth of approximately six inches.

(4) See Drawings for details on construction of silt fence sediment barrier.

F. **Stabilized Construction Entrance**

(1) Stabilized construction entrances reduce tracking of sediment onto streets or public rights-of-way and provide a stable area for entrance or exit from construction site.

(2) Stabilized construction entrances shall be located at points of construction ingress and egress that are not on existing paved area.

(3) The entrance shall be maintained in a condition which will minimize tracking of sediment onto public rights-of-way.

(4) All sediment spilled, dropped or tracked onto public rights-of-way shall be removed immediately by vacuum sweeping, scraping or sweeping.

(5) When necessary, wheels shall be cleaned or washed to remove sediment prior to entrance onto public rights-of-way. When washing is required, it shall be done on an area stabilized with stone and which drains into an approved sediment trapping device. Daily maintenance and inspection is required.

(6) After construction is complete and the site is stabilized, the stabilized construction entrances shall be removed and the area shall be stabilized.

G. **Temporary Cover:** The following methods shall be used to provide temporary ground cover and stabilization of erodible surfaces.

(1) Seeding

a. The seed shall be 100% (by weight) annual rye, and shall be applied at the rate of 10 pounds per 1,000 square yards.

b. Temporary seeding on slopes in excess of 5:1 shall be mulched. All temporary seeding between June 1 and September 15 shall be mulched. Temporary seeding shall be watered as required to develop cover.

c. Mulch shall be straw, shall be clean and free from noxious weeds and shall be applied at the rate of 1.5 tons per acre.

(2) Black Polyethylene Sheeting

a. 3 mil black polyethylene sheeting may be used to stabilize erodible/soluble material stockpiles. Sheets shall be overlapped so as to shed and not contain water. Sheets shall be anchored with tires or approved equal at six feet O.C. along seams and edges and ten feet O.C. throughout.

(3) Plywood Sheeting

a. Plywood sheeting may be used to protect existing vegetation under short duration storage/stockpile areas. Use of this protection method shall be limited to maximum four days. Contractor shall be responsible for restoring or replacing vegetation damaged under sheeting.

3.03 RESTORATION

A. After completion of construction, remove all temporary erosion and sedimentation control devices. Restore areas in which these devices were located to the original condition or to the condition called for by the Contract Documents.

END OF SECTION 02010

SECTION 02040
MAINTENANCE OF TRAFFIC

PART 1: GENERAL

1.01 DESCRIPTION

A. This work pertains to the maintenance of traffic, both vehicular and pedestrian, on any area affected by the work of the Contract.

B. All work shall be in accordance with the latest issue of the Maryland Manual of Uniform Traffic Control Devices (MdMUTCD), the Contract Documents and as directed by the Engineer. Unless specifically called out on the Bid Form as a separate bid item, maintenance of traffic shall include all requirements listed here and on the Contract Drawings including furnishing traffic managers and flaggers, relocating, maintaining, and removing existing traffic signs and other traffic control devices and implementation of a Traffic Control Plan (TCP), and the cost for such shall be rolled into the unit prices for the related sewer rehabilitation work.

1.02 RELATED SECTIONS

A. Section 02200 – Excavation, Backfill and Compaction
B. Section 02900 – Restoration of Paved and Grassed Areas

1.03 QUALITY ASSURANCE

A. **Source Quality Control**

(1) The Engineer will inspect all materials furnished by the Contractor for maintenance of traffic to ensure compliance with the Contract Documents. However, the inspection, or the lack thereof, by the Engineer shall in no way relieve the Contractor of his responsibility to provide for the maintenance of traffic in accordance with the Contract Documents.

1.04 SUBMITTALS

A. Each Contract shall contain a Traffic Control Plan (TCP) for all work within any obstruction of and/or crossing of any public right-of way or any private drive, access road, parking lot or sidewalk, which will assure the safety of motorists, pedestrians and construction workers during construction projects. The TCP will cover such items as signing, pavement markings, methods and devices for delineation and channelization, the placement and design of barriers, barricades and impact attenuators and other items required.

B. The Contractor is required to develop and implement the TCP. The Contractor's TCP shall be submitted in writing to the Engineer 20 days prior to starting any work. The Contractor must have written approval from the Engineer of his TCP prior to its implementation.

C. The TCP shall be implemented by the Contractor's traffic manager.

D. The TCP is subject to amendment during the life of the Contract due to changing field conditions. Implementation of either TCP does not relieve the Contractor of any of the provisions set forth in the Special Provisions or of these Specifications.

E. The Contractor shall assign to the project an employee to serve in the capacity of traffic manager. The employee shall be thoroughly experienced in all aspects of traffic control.

(1) The Contractor shall submit the traffic manager's name, qualifications and copy of certificates to the Engineer for approval at least 10 working days prior to commencing any work on the project. Any change in the appointment of the individual during the term of the Contract shall require a written submission and approval by the Engineer.

(2) The traffic manager shall have the primary responsibility and sufficient authority for the implementation of the approved Traffic Control Plan, the monitoring and maintenance of signs, pavement markings, channelizing devices, arrow boards, detour signals, turnouts, the furnishing of watchpersons, flaggers and other safety aspects of the Contract.

(3) The traffic manager shall closely coordinate his operations with the Town. The traffic manager shall oversee and supervise all aspects of maintenance of traffic on the project including those involving Subcontractors. The traffic manager will be required to make on-site inspection of those operations that affect traffic (vehicular and pedestrian) on a regular basis and be available for consultation at all times. The increase, decrease or elimination of the item shall be in accordance with the Specifications.

PART 2: PRODUCTS

2.01 MATERIALS

A. All materials, whether temporary or permanent, shall meet the requirements of the Maryland Manual on Uniform Traffic Control Devices (MdMUTCD), the Maryland State Highway Administration and the Contract Documents.

PART 3: EXECUTION

3.01 PERFORMANCE

A. The Contractor shall provide for the safe and expeditious movement of all traffic through the project in accordance with the TCP, the Contract Documents and as directed by the Engineer.

B. Equipment which is in use, and required temporary storage within the limits of the project and materials stored or stockpiled on the project site shall be placed in a location which shall not be hazardous to the traveling public and as approved by the Engineer.

C. All vehicles and all construction equipment entering or leaving the Project site and/or work area must follow the traffic flow pattern as established by the Traffic Control Plan.

D. All construction operations shall be performed in the normal direction of traffic flow unless written permission is obtained from the Engineer prior to the commencement of such work. Work performed and equipment moving against the normal traffic flow pattern is strictly prohibited, unless a written exception is granted by the Engineer.

E. Upon completion and acceptance of the work or as the need for temporary traffic control devices ceases, the devices shall be removed by the Contractor in a timely manner and shall remain the property of the Contractor.

END OF SECTION 02040

SECTION 02200
EXCAVATION, BACKFILL AND COMPACTION

PART 1: GENERAL

1.01 DESCRIPTION

The Contractor shall furnish all labor, materials, equipment and incidentals necessary to perform all excavation, backfill, fill, grading and excavation stabilization required to install the piping and structure work shown on the Drawings and specified herein. The work shall include, but not necessarily be limited to manholes and chambers; duct, conduit and pipe; roadways and paving; backfill, fill and borrow; grading; disposal of surplus and unsuitable materials; and all related work such as sheeting, bracing and water handling.

The Contractor shall examine the site and undertake his own subsurface investigations prior to submitting his bid, taking into consideration all conditions that may affect his work. The Owner and Engineer make no representation as to subsurface characteristics at locations where this project work is to take place.

Excavation and backfill for pipe trenches and structures shall be to elevation as shown on the Drawings.

Prior to construction, the Contractor shall be responsible for taking sufficient measurements, horizontal and vertical, to ensure that all completed work, which includes but is not limited to pavement, curbs, gutters and drainage facilities, are restored to their original lines and grades.

Prior to the start of work and at each change of construction circumstances, the Contractor shall submit his proposed method of dewatering, excavation, backfilling, and compaction to the Engineer to facilitate inspection and testing.

1.02 RELATED SECTIONS

A. Section 02010 – Sediment and Erosion Control
B. Section 02600 – Ductile Iron Gravity Sewer Pipe and Fittings
C. Section 02610 – PVC Gravity Sewer Pipe and Fittings
D. Section 02700 – Precast Concrete Manholes
E. Section 02900 – Restoration of Paved and Grassed Areas

1.03 SUBMITTALS

A. Granular Materials

(1) Granular materials required for filling, backfilling, bedding, subbase and other purposes shall be as shown on the Drawings. Prior to bidding, prospective

contractors shall familiarize themselves with the available quantities of approved on-site and off-site materials.

(2) For each on-site or off-site materials proposed, notify the Engineer of the source of the material and furnish to the Engineer for acceptance a representative sample weighing approximately 50 pounds at least 10 calendar days prior to the date of anticipated use of such material. Except as specified herein, only off-site approved materials shall be utilized.

(3) The Engineer reserves the right to inspect proposed sources of off-site granular material and to order such tests of the materials as he deems necessary to ascertain its quality and graduation of particle size. The Contractor shall, at his own expense, engage an approved testing laboratory to perform such test, and submit certified test results to the Engineer. If similar tests of the material from a particular source were performed previously, submit results of these tests to the Engineer for consideration.

(4) No granular materials shall be used on this project for fill, backfill, bedding, subbase or other purpose until approval is obtained from the Engineer, and only material from approved sources shall be used.

B. Compaction

(1) Submit in writing a description of the equipment and methods proposed to be used for compaction.

1.04 REFERENCE SPECIFICATIONS, CODES AND STANDARDS

A. Standard Material Specifications for gravel, sand, crushed stone and gravel-cement mixtures published by the Maryland Department of Transportation, State Highway Administration are listed below.

ASTM C136	Sieve Analysis of Fine and Course Aggregates
ASTM D698	Laboratory Compaction of Soil Using Standard Effort
ASTM D1556	Density of Soil in Place by Sand-Cone Method
ASTM D1557	Laboratory Compaction of Soil Using Modified Effort
ASTM D2922	Density of Soil in Place by Nuclear Methods
ASTM D3017	Water Content of Soil in Place by Nuclear Methods
OSHA	Occupational Safety and Health Administration

PART 2: PRODUCTS

2.01 MATERIALS

Materials for use as fill and backfill shall be as described below. For each material, the contractor shall notify the Engineer of the Source of the material and shall furnish the Engineer, for approval, a representative sample weighing approximately 50 pounds at least ten calendar days prior to the date of anticipated use of such material. Disposal of unsuitable material is specified further herein.

A. **Structural Fill:** Structural fill shall be used below spread footing foundations, slab-on-grade floors, and other structure not founded on undisturbed earth. Structural fill material shall be well graded stone or clean san, free of organic, deleterious and/or compressible material. Minimum acceptable density shall be 95 percent of the maximum density as determined by AASHTO T-180. If moisture content is not within plus or minus 3 percent of optimum moisture content or improper for attaining the specified density, either water shall be added or material shall be dried until the proper moisture content for compaction is reached.

   Stone shall comply with all requirement for Gradation CR-14 or 57 as specified in the MDSHA Standard Specifications for Highway Construction 1986 Edition or latest edition. Sand shall meet the requirements of ASTM C-33.

B. **Common Fill:** Common fill material shall be free from organic matter, muck or marl, and rock exceeding 6 inches in diameter. Rock of 3-1/2 to 6 inches in diameter can be used in the fill material except around pipe as shown on Detail 100 and a maximum of 3-1/2 inches within 12 inches of road sub-grade or a structure. Common fill shall not contain broken concrete, masonry, rubble, wood, roots, plants or other similar materials. Common fill shall have a moisture content of plus or minus 3 percent of the optimum moisture for maximum compaction density and shall not be frozen or lumpy.

   Material falling within the above specification encountered during the excavation may be stored for reuse. All material which, in the opinion of the Engineer, is not suitable for reuse shall be removed for disposal as unsuitable materials.

C. **Crushed Stone Bedding:** Crushed stone for pipe bedding, structure bases and at other locations indicated on the Drawings shall consist of clean well graded crushed stone. Crushed stone shall comply with all requirements for Gradation 57 as specified in the MDSHA Standards.

D. **Geofabric:** At locations directed by the Engineer, geofabric shall be placed over the bottom of the excavation prior to placing structural fill or crushed stone bedding. The geofabric shall be Mirafi 140N or equal and shall meet the following properties:

   Weight – 4.5 oz/square yard per ASTM D3376
   Grab Tensile Strength – Average 120 lbs per ASTM D1682

Grab Tensile Elongation to Break – Average 55% per ASTM D1682
Mullen Burst Strength – 210 psi per ASTM D-3786-80
Puncture Strength – Average 70 lbf per ASTM D-3787-80
Water Permeability, Kv – 0.2 cm/sec per Constant head permeability testing
Equivalent Opening Size (EOS) – 100 Sieve per U.S. Standard COE CW 2215

PART 3: EXECUTION

3.01 PREPARATION

A. **Clearing:** All clearing on the permanent sewer rights-of-way and temporary construction easements shall be performed as necessary for access, stringing of sewer materials and construction of sewers and structures. The Permanent Sewer Right of Way (R/W) or other limits as shown on the Drawings shall be cleared of all logs, trees, roots, brush, tree trimmings, rock and other objectionable materials and debris. All stumps shall be removed or ground in place to a minimum of 24 inches below the surface. Town/Engineer must approve each stump to be ground in place. All stumps that are ground in place shall be treated to prevent regrowth of the tree from the stump. Subgrades for fills and embankments shall be cleaned and stripped of all surface vegetation, sod and organic topsoil. All waste materials shall be removed from the site and disposed of by and at the expense of the Contractor.

Trees 6 inches in diameter or larger shall only be removed from the Temporary Construction Easement, when it is necessary for the trenching operation and only then with permission of the Owner.

Refer to Section 02900 for additional requirements.

B. **Excavation Stabilization:** All excavations shall be stabilized to protect the safety of workers in the excavations from earth slides and cave-ins and to protect the structural integrity of the pipe or structure being constructed.

With reference to the terms and conditions of the construction standards for excavations set forth in the OSHA "Safety and Health Regulations for Construction", Chapter XVII of Title 29, CFR, Part 1926, the Contractor shall employ a competent person and, when necessary, a registered Professional Engineer in the State of Maryland, to act upon all pertinent matters of the Work of this section. All OSHA requirements shall be continually adhered to.

Excavations shall provide adequate working space and clearances for the Work to be performed therein and for installation and removal of concrete forms when required. In no case shall excavation faces be undercut for extended footings.

Groundwater control is necessary for creating stable foundations for pipes and structures and for stabilizing excavation slopes.

The type of excavation stabilization systems to be used for different sections of sewers and structures shall be selected by the Contractor based upon geotechnical characteristics, excavation depth, groundwater probability, proximity of existing structures, area available for excavation storage, use of excavation area, etc. The Contractor shall employ the services of a Maryland Registered Professional Engineer as necessary to evaluate these conditions and to design the necessary excavation stabilization system and groundwater control system for each such section.

Town/Engineer will not permit excavated material to be stored outside of the designated Permanent Sewer R/W and Temporary Construction Easement shown on the Drawings unless approved by the property owner.

The Contractor shall be solely responsible for stabilizing excavations and selecting the appropriate stabilization methods. Options include using movable earth retaining devices (trench boxes) and installing sheeting and shoring systems. The Contractor will not be allowed to slope trench walls instead of providing stabilization systems such as those mentioned herein unless otherwise approved by the Engineer and/or specified as acceptable elsewhere.

Where trench boxes are used to stabilize excavations for pipes, the trench boxes shall be designed and certified trench boxes purchased from a manufacturer in the business to sell trench box equipment with supporting literature. If the Contractor chooses to build the trench box, it must be designed and certified by a Professional Engineer Registered in Maryland. Design drawings and computations shall be submitted to the Engineer for information prior to construction. The trench box interior widths shall accommodate the trench widths specified in the details and shall provide adequate space for exterior jointing and compaction of pipe bedding. The lower edges of trench boxes shall not be deeper than the mid-diameter of the pipe.

Sheeting and shoring systems shall also be designed by a Professional Engineer Registered in Maryland. Sheeting shall be plumb and securely braced in position. Sheeting and shoring systems shall be adequate to withstand all pressures to which they will be subjected. For trench sheeting for pipes, no sheeting closer than one pipe diameter or two feet (whichever is greater) from the outside edge of the pipe shall be withdrawn if driven below mid-diameter of any pipe, and not sheeting shall be cut off at a level lower than the top of any pipe unless otherwise approved by the Engineer. Any sheeting beyond these limits which is withdrawn shall be done in a manner in which the sheeting slides smoothly out of position without any disturbance manner in which the sheeting slides smoothly out of position without any disturbance of adjacent bedding. The remaining hole shall immediately be filled by hand with sand.

All sheeting and shoring shall be carefully removed in such a manner as not to endanger workers, the construction, other structures, utilities, piping or property. For structures, all sheeting and shoring shall be removed after completion of the substructure or base slab. All voids left or caused by withdrawal of sheeting shall be immediately backfilled and compacted to project specifications.

3.03 INSTALLATION/APPLICATION

A. **Excavation Dewatering:** The Contractor shall construct and place all pipes, concrete structures, structural fill, and crushed stone bedding in-the-dry and all such work shall stop at any time that water appears in the excavation until the water is completely removed. The Contractor shall maintain the water level a minimum of one foot below proposed bottom of the excavation. For purposes of these Specifications, "in-the-dry" is defined as no free water inside the excavation. Dewatering shall be continuous until all work in the area is complete and backfilled.

Structures, casings and pipes installed adjacent to streams and at or below the stream water level will be below the natural groundwater table, and thus, extensive groundwater handling will be required and should be expected.

The Contractor shall, at all times during construction, provide and maintain proper equipment and facilities to lower the groundwater table below the excavation, to remove promptly and dispose of properly all ground and surface water entering excavations, and to keep such excavations dry so as to obtain a satisfactory undisturbed sub-grade foundation condition until the fill, structure, or pipes to be built thereon have been completed to such extent that they will not be floated or otherwise damage by allowing water levels to return to natural elevations.

Pipes, casings and structures shall not be installed in water or submerged within 24 hours after being placed. Water shall not flow over new concrete within four days after placement unless otherwise approved by the Engineer. Pipe not meeting this requirement shall be removed as directed by the Engineer.

In no event shall water rise to cause unbalanced pressure on structures until the concrete or mortar has set at least 24 hours. The Contractor shall prevent flotation of pipes by promptly placing and compacting backfill to these Specifications.

Surface drainage shall be controlled so that no surface drainage shall enter the excavation at any time. At no time shall installed sewer pipe be used for dewatering, drainage or dewatering any surface water conveyance.

Dewatering shall at all times be conducted in such a manner as to preserve the natural undisturbed bearing capacity of the sub-grade soils at the proposed bottom of the excavation. The Contractor shall be responsible for correcting any disturbances to natural bearing soils or damage to structures caused by inadequate dewatering systems or by interruption of the continuous operation of the system as specified. If the trench bottom at final excavation is loosened or unstable to extent that proper support of the bedding or pipe has been compromised in the opinion of the Engineer, the loosened/unstable material shall be removed and replace with structural fill as directed by the Engineer at no additional cost to the Owner.

The Contractor shall be solely responsible for designing and implementing dewatering systems to meet the requirements specified herein. The Contractor shall retain a

Professional Engineer registered in Maryland to design the dewatering systems as necessary and/or required by the Engineer. The contractor shall submit to the Engineer for information a conceptual plan for dewatering system prior to commencing work. The installed dewatering system shall conform to the conceptual plan. The Contractor and/or his Engineer, where required, shall monitor the performance of the dewatering systems during the progress of the Work and make modifications as necessary to remain in compliance with the requirement specified herein. Modifications and alternate dewatering methods shall be submitted to the Engineer for review.

The Contractor's dewatering system may include pumping from well pints, deep wells or sumps. The method(s) selected must maintain the ground water levels at least 12 inches below the bottom of the excavation as specified herein. Whenever the selected method(s) do not meet this requirement, the Contractor shall immediately employ additional dewatering measures. The Contractor is advised that pre-drainage of the soil may be required to achieve acceptable soil moisture contents so that the soil can be promptly used for backfilling as specified further herein. Pumping equipment shall be quiet or silent pumps or electric motor-driven pumps. All pumping systems must be approved by the Engineer.

The Contractor shall provide for the disposal of the water removed from the excavation in such manner as shall not cause erosion, siltation or turbidity increases in any water course; injury to public health; degradation or damage to private or public property or to any portion of the work completed or in progress, or to roads to streets; or cause any impediment to the reasonable use of the site by others. Dewatering and drainage water shall not be discharged into other sewers or storm drains unless approved by the Engineer. Discharges to water courses or storm drains shall comply with all applicable requirements of all governmental agencies having jurisdiction. All water shall be filtered or desilted in temporary sedimentation basins before discharge to water courses or storm drains.

Where specified or required by the Engineer on the Drawings or in the Supplemental Conditions, the Contractor shall install groundwater observation wells (piezometer wells) along the sewer route to be used to determine the ground water level prior to and during construction. Locations of the observation wells at structures and along pipes shall be approved by the Engineer prior to their installation. The observation wells shall be extended to 6 inches above finished grade, capped with screw-on caps protected against damage. Where designated by the Engineer, the wells shall be left in place at the completion of the Project. Otherwise the wells shall be filled with concrete and cut off 2 feet below finish grade. The Contractor shall obtain all applicable permits to construct and abandon piezometer wells for the Project from the Maryland Department of the Environment (MDE) and any other governmental agencies having jurisdiction. The Contractor shall comply with the terms and conditions of the permits whether by himself or others. The Contractor shall provide a suitable electronic probe for use by himself and the Engineer for monitoring the water depth in the observation wells.

B. **Excavation:** Excavation may be done with equipment of the Contractor's choosing. All excavation shall be stabilized by methods specified herein on the Contractor's choosing.

No more trench shall be opened in advance of pipe laying than is necessary to expedite the Work. No more than 200 feet of trench shall be open on any sewer under construction. Failure to comply with this requirement shall be cause of the shutdown of that portion of the project until such backfilling is accomplished.

Excavated material which has suitable characteristics for common fill backfill shall be covered and/or stockpiled in such a manner that it will not collect either surface water or rainwater. The stockpile top surface shall be sloped to drain away from the excavation site and graded smooth and compacted to drain rainwater rapidly. Backfill containing excessive moisture shall not be used. It shall be the Contractor's responsibility to control or adjust the moisture content of excavated materials to the requirements for common fill before such materials may be used for backfill at no cost to the Owner.

Excavation shall be stockpiled within the permanent and temporary rights-of-way of sewers. Trees to remain on temporary rights-of-way shall not be damaged by excavation, stockpiling and backfilling operations. Any inadvertent damage shall be immediately repaired as specified elsewhere.

All excavation left unattended for more than one hour shall be completely barricaded and provided with warning signs and lights.

All OSHA and other applicable safety regulations shall be observed on all excavation work.

The depth of excavation shall be to the bottom elevation of the bedding for structures and pipes. The width shall be to at least two feet beyond the neat lines of structure footings and as shown on Drawings or in the Details for sewer pipes.

The Contractor shall over-excavate pipe and structure trenches and backfill with structural fill where approved by the Engineer. Over-excavation will be required when the bottom of the trench is not stable for support of the pipe or structure as determined by the Contractor. The Contractor shall be paid for such over-excavation at the unit prices bid when so provided in the Bid Schedule and when so agreed by the Engineer. The Engineer must approve over-excavation before it is performed, or it will not be paid for. However, if the bottom is not stable due to improper dewatering or other preparatory work by the Contractor, then no additional payment shall be made to the Contractor as specified elsewhere herein. It shall be the Contractor's sole responsibility to provide a stable and solid trench bottom for installation of the sewer facilities.

Where rock is excavated with earth material, care shall be taken not to contaminate the excavation stored for use as common fill with excavated rock larger than the maximum size allowed.

C. **Rock Excavation:** Rock excavation shall mean the removal of rock, which in the opinion of the Engineer, requires for its' removal drilling and blasting, wedging, sledging, cutting or barring, and which cannot be removed by excavation equipment with a bucket curling force of at least 18,300 pounds. Rock excavation includes boulders, which in the

sole opinion of the Engineer, require blasting for removal. Rock excavation will be paid at the unit price bid. The Bid Schedule includes an estimated quantity for rock excavation. The Contractor shall not be due any adjustment to the unit price bid, if the estimated quantity is exceeded or not used.

Rock, which can be excavated at a reasonable rate with trench excavation equipment, shall be considered earth. Boulders up to 1 cubic yard in volume, which can be removed without resorting to blasting, shall be considered earth.

If blasting is required, the Contractor shall state so in writing with a request to blast. If blasting is approved by Engineer, pre-blasting and post-blasting surveys shall be conducted on and reported for all major structures within the influence range of any blasting operations or within a minimum of 200 feet, whichever is greater from any blast site. The surveys shall consist of a visual inspection and recording by notes and photographs of structures, to include specifically cracks or other structural damage previously sustained, and shall be conducted by a qualified technician furnished by the contractor's Insurance Underwriter. A copy of all notes and photographs shall be submitted to the Owner prior to the beginning of blasting operations and prior to final payment. The records so obtained shall be retained in the Contractor's file for at least three years after completion of the Contract. In the event of any damage claim, a report shall be prepared by the Contractor on the particular structure involved to include those notes and photographs and submitted to the Engineer. Costs for blasting survey shall be a subsidiary obligation of the Contract and included in the unit price bid for rock excavation. Seismographs shall be used where deemed necessary by the Contractor and/or Engineer.

At least 24 hours advance notice shall be given in writing to the Police and Fire Departments, other Town and County officials, all tenants and residents within 1,000 feet of the work, and authorized representatives of all utilities which might be affected by blasting operations before blasting. Care shall be taken to avoid damage to utilities or other structures above and below ground. Unless otherwise permitted, no blasting will be allowed prior to 8:00 A.M. or after 4:00 P.M. local time.

Prior to commencing any blasting operations, the Contractor shall furnish to the Engineer a Certificate of Insurance specifically covering any and all obligations assumed pursuant to the use of explosives.

All blasting operations shall be conducted in strict accordance with any and all decrees, rules, regulations, ordinances and laws as may be imposed by any regulatory body and/or agency having jurisdiction over the work relative to handling, transporting, use and storage of explosives. All blasting operations shall be conducted by qualified persons licensed in Maryland and meeting requirements enumerated in OSHA Regulations Part 1926, Subpart U, Section 1926.901 – Blaster Qualifications. Satisfactory information must be submitted to the Engineer prior to any blasting to document the qualifications of the blasters. All blasting shall be performed with all possible care to avoid injury to persons and property.

In addition to observing all laws, regulations and ordinances relating to transporting, storage and handling of explosives, conform to any further requirement which the Engineer may deem appropriate.

All rock, dirt and debris from blasting shall be contained within the excavation by use of weighted mats or undisturbed overburden. The Contractor's blaster shall be fully responsible for determining the method of containment and the weight, size and placement of material required to contain the charge being used.

Charges shall be sized such that no damage to houses, structures, roadways, etc. outside the limits of the excavation will occur. Where there is a possibility of such damage, the charge should be initially set at a very low level and increased in small increments until the proper charge is determined. The Contractor shall be held responsible for any and all injury to persons and damage to public or private property.

If rock below the intended blasting grade is shattered by blasting, caused by holes drilled too deep, or too heavy charges of explosives or any other circumstance due to blasting and if, in the opinion of the Engineer, the shattered rock is unfit for sub-grade, the rock shall be removed and the excavation refilled with structural fill at no additional cost to the Owner.

Excavated rock and boulder material exceeding 6 inches in the largest cross-sectional dimensions shall not be used for backfilling unless otherwise approved. Rock of 3-1/2 to 6 inches in diameter can be used in the fill material except that a maximum of 1-1/2 inches shall be used within 12 inches of a pipeline and a maximum of 3-1/2 inches within 12 inches of road sub-grade or a structure. All rock used in backfill shall be mixed with granular backfill materials to achieve the required density. Rock used in backfill shall be free from organic matter, muck or marl.

All rock not used for backfilling shall be removed from the site and disposed of by the Contractor at no additional cost to the Owner. No disposal on Owner property or rights-of-way shall be permitted unless authorized by the Owner. The Contractor shall advise the Engineer in writing of the disposal location and submit a copy of the agreement with the disposal site property owner. The Contractor shall import soil as necessary to fill the volume displaced by the removed rock. The cost for the imported soil shall be included in the unit price for rock excavation.

D. **Bedding:** Bedding stone for structures and pipe shall be placed for the entire depth and width of excavation as shown in Standard Detail No. 100 except when rock is encountered, in which case the rock shall be removed to 6 inches below the final elevations. Bedding shall be placed only on dry, compacted sub-grade or on rock.

Pipe bedding shall be placed in the trench to the elevation of the pipe base and thoroughly compacted prior to pipe installation. This bedding shall not be used under any circumstances as a drain for groundwater. The Contractor shall take all precautions necessary to maintain the bedding in a compacted state and to prevent washing, erosion or loosening of this bed.

Final pipe elevation in the compacted bedding shall be obtained by manual excavations, including additional excavation under the pipe bells. Following jointing, crushed stone bedding shall be brought up to the mid-diameter of or above the pipe (per Standard Detail No. 100) level across the width of the Excavation and thoroughly compacted.

Pipe shall be laid to the true lines and grades shown on the Drawings with bedding and backfill as shown in Standard Detail No. 100 and as specified in these Specifications. Each section of pipe shall be laid to true alignment and grade as shown and specified on the Drawings. Pipe elevations and locations shall be checked immediately upon setting the pipe in the trench, and the location and elevation of each pipe shall be adjusted to meet the true alignment and grade specified. If the pipe is not installed to the true lines and elevations, the Engineer and Owner shall decide on appropriate corrective measures. Such corrective measures may require that the installed sewer be removed and re-installed correctly. The Engineer's decision shall be final and no additional payment or time shall be due the Contractor to comply with the Engineer's decision.

When pipe are to be encased in concrete, the top and bottom of the bedding shall be lowered by the specified thickness of the concrete encasement.

E. **Pipe Installation:** The trench and bedding shall be prepared in such a manner to prevent contamination of pipe joints with soil or bedding and to provide complete support of each section of pipe, except at the bells and spigots.

After the pipe joint is finished, place and compact bedding under and around the pipe bell before continuing the bedding to mid-diameter of or above the sewer pipe per Standard Detail No. 100.

F. **Backfilling:** Backfilling of pipes and structures may utilize the excavated material, so long as it meets the requirements for common fill and the moisture content is within 3 percent of optimum moisture for compaction to specified density. Otherwise, imported common fill meeting these requirements shall be used for backfill. Imported common fill shall be paid at the unit prices bid. Payment for imported soil shall only be made when approved by the Engineer prior to removing and importing soil.

Where excavated material meets the requirements for common fill except for moisture content, the moisture content shall be adjusted upward by sprinkling or downward by spreading and turning and drying. It shall be the Contractor's responsibility to store and prepare such excavated materials to meet the moisture requirement. No additional payment for backfill materials, including imported fill, shall be paid by the Owner, where excavated materials meet the requirements for common fill, except for moisture content. All costs associated with adjustment (up or down) or moisture content of excavated materials to be used for backfill shall be borne by the Contractor.

Backfill shall be placed only on dry compacted surfaces. Any water or soil above its liquid limit shall be removed before placing any backfill. The subgrade shall be compacted before any backfill placement.

Backfill shall be placed in maximum 6-inch layers to 12 inches above the top of the pipe and 8-inch level layers compacted thereafter to at least 95 percent of maximum dry density at optimum moisture content as determined by AASHTO T-180 or ASTM D698. For pipe backfill above the top off the pipe in open areas, where specifically approved in writing by the Engineer, layer thickness may be increased to 12 inches with 90 percent compaction.

In paved MDSHA and Town/County roads, the Contractor shall remove all excavated soil from the site and import CR6 stone to completely backfill the trench to the pavement subgrade. The stone shall be installed and compacted via mechanical means in 12-inch layers. Costs associated with removing and disposing of the excavated soil and supplying and importing the stone shall be included in the various unit costs bid. Begin CR 6 at least 12 inches above the top of ductile iron pipe (first 12 inches to be #57 stone). Refer to Section 02900 for additional requirements.

Compaction shall be by mechanical compactor. For pipe, the size of the compactor shall fit between the pipe and the trench sides below the pipe mid-diameter, and between the pipe and the sheeting or trench box above mid-diameter. Larger compaction equipment may be used, as desired, after backfill has reached at least two feet above the top of the pipe. For structures, the size of the compactor shall fit between the structure and the sheeting until the elevation at which sheeting is withdrawn, at which elevation the entire excavated area shall be compacted.

Particular attention shall be given to compaction where sheeting is withdrawn. Sheeting holes shall be filled with structural fill or bedding material and manually compacted by ramming after the sheeting is withdrawn.

The Owner may have compaction tests performed on the compacted backfill to verify compliance with these requirements. The Owner will pay for the initial compaction tests. The Contractor shall pay for any re-tests required, because the backfill did not meet the specified compaction requirements.

Backfilling of structures shall be deferred until any placed concrete has cured at least seven days, unless otherwise approved by the Engineer.

Backfill of sewers in open areas shall be mounded approximately 3 inches above finish grade to allow for settlement where approved by the Engineer in writing and/or where specified by the Engineer, and that the Contractor agrees to regrade these areas as needed within the guarantee period.

The top 4 inches of backfill shall be of stockpiled or imported topsoil. After final grading, the topsoil shall be prepared and seeded or sodded as specified in Section 02900.

3.04 FIELD QUALITY CONTROL

A. **Test Pits:** The contractor shall excavate test pits at structure locations and on sewer routes sufficiently in advance for the purpose of locating all known and unknown underground utilities or structures as an aid in establishing the nature of the soils to be excavated including locations of rock. These pits shall be backfilled as soon as the desired information has been obtained. The backfilled surface shall be maintained in a satisfactory condition for the original use until construction starts at the pit locations. If in a paved area, test pit backfill shall be cold patched with bituminous pavement.

Excavation of test pits shall be considered work incidental to the project and the cost shall be included in the various unit prices for the Work.

B. **Protection of Utilities:** The Contractor shall locate and protect all utilities which could be affected by the work, including railroads, overhead cables, poles, buried cables, wastewater pipes, water pipes, gas lines and drainage pipes and appurtenances. Before working in any area, the Contractor shall contact the local utilities locating company to mark the locations of underground utilities. Any underground utilities which could interfere with the work shall be staked and flagged.

Underground pipes and cables which cross the excavations shall be carefully exposed and temporarily supported from overhead beams furnished by the Contractor to the satisfaction of the utility owner. The utility shall be carefully incorporated in the backfill with full support and protection. Should any utilities need to be relocated, the Contractor shall discuss the situation in a meeting with the Engineer and utility owner.

Before operating any equipment near a buried or overhead electric cable, the Contractor shall contact the power company to arrange for protection of the cable and the Contractor's personnel and equipment. Compliance with the power company's conditions shall be considered a subsidiary obligation under the contract. The Engineer shall be invited to attend all meetings with the power company for information only.

C. **Disposal of Excess Excavation:** Excess excavation, excavation which is unsuitable for backfill and excavated rocks larger than 6 inches shall be disposed of off-site by the Contractor at no additional cost to the Owner, except where unanticipated unsuitable excavated material is directed by the Engineer to be disposed of and replaced by imported backfill.

Excess excavation which meets the requirements of common fill shall be stockpiled in a common readily accessible area, graded and/or covered for rain runoff, and used as a source of imported material until all the needs for imported material are identified, at which time the balance of the stockpiled excess material shall be disposed.

In certain areas the nature of the terrain in the right-of-way may be suitable for spreading excess and/or unsuitable excavation on the ground surface prior to preparation and seeding which would eliminate the need for offsite disposal. The Engineer shall solely make this judgment and will so direct the Contractor. The Contractor shall not presume in his bid price that any such areas exist.

The Contractor shall locate and make all arrangement for disposal of excess and unsuitable materials. All handling, hauling and disposal costs shall be included in the bid price. Stockpile areas shall be prepared and seeded or sodded as specified. Disposal shall be in compliance with all applicable regulations.

END OF SECTION 02200

SECTION 02040
MAINTENANCE OF TRAFFIC

PART 1: GENERAL

1.01 DESCRIPTION

A. This work pertains to the maintenance of traffic, both vehicular and pedestrian, on any area affected by the work of the Contract.

B. All work shall be in accordance with the latest issue of the Maryland Manual of Uniform Traffic Control Devices (MdMUTCD), the Contract Documents and as directed by the Engineer. Unless specifically called out on the Bid Form as a separate bid item, maintenance of traffic shall include all requirements listed here and on the Contract Drawings including furnishing traffic managers and flaggers, relocating, maintaining, and removing existing traffic signs and other traffic control devices and implementation of a Traffic Control Plan (TCP), and the cost for such shall be rolled into the unit prices for the related sewer rehabilitation work.

1.02 RELATED SECTIONS

A. Section 02200 – Excavation, Backfill and Compaction
B. Section 02900 – Restoration of Paved and Grassed Areas

1.03 QUALITY ASSURANCE

A. **Source Quality Control**

(1) The Engineer will inspect all materials furnished by the Contractor for maintenance of traffic to ensure compliance with the Contract Documents. However, the inspection, or the lack thereof, by the Engineer shall in no way relieve the Contractor of his responsibility to provide for the maintenance of traffic in accordance with the Contract Documents.

1.04 SUBMITTALS

A. Each Contract shall contain a Traffic Control Plan (TCP) for all work within any obstruction of and/or crossing of any public right-of way or any private drive, access road, parking lot or sidewalk, which will assure the safety of motorists, pedestrians and construction workers during construction projects. The TCP will cover such items as signing, pavement markings, methods and devices for delineation and channelization, the placement and design of barriers, barricades and impact attenuators and other items required.

B. The Contractor is required to develop and implement the TCP. The Contractor's TCP shall be submitted in writing to the Engineer 20 days prior to starting any work. The Contractor must have written approval from the Engineer of his TCP prior to its implementation.

C. The TCP shall be implemented by the Contractor's traffic manager.

D. The TCP is subject to amendment during the life of the Contract due to changing field conditions. Implementation of either TCP does not relieve the Contractor of any of the provisions set forth in the Special Provisions or of these Specifications.

E. The Contractor shall assign to the project an employee to serve in the capacity of traffic manager. The employee shall be thoroughly experienced in all aspects of traffic control.

(1) The Contractor shall submit the traffic manager's name, qualifications and copy of certificates to the Engineer for approval at least 10 working days prior to commencing any work on the project. Any change in the appointment of the individual during the term of the Contract shall require a written submission and approval by the Engineer.

(2) The traffic manager shall have the primary responsibility and sufficient authority for the implementation of the approved Traffic Control Plan, the monitoring and maintenance of signs, pavement markings, channelizing devices, arrow boards, detour signals, turnouts, the furnishing of watchpersons, flaggers and other safety aspects of the Contract.

(3) The traffic manager shall closely coordinate his operations with the Town. The traffic manager shall oversee and supervise all aspects of maintenance of traffic on the project including those involving Subcontractors. The traffic manager will be required to make on-site inspection of those operations that affect traffic (vehicular and pedestrian) on a regular basis and be available for consultation at all times. The increase, decrease or elimination of the item shall be in accordance with the Specifications.

PART 2: PRODUCTS

2.01 MATERIALS

A. All materials, whether temporary or permanent, shall meet the requirements of the Maryland Manual on Uniform Traffic Control Devices (MdMUTCD), the Maryland State Highway Administration and the Contract Documents.

PART 3: EXECUTION

3.01 PERFORMANCE

A. The Contractor shall provide for the safe and expeditious movement of all traffic through the project in accordance with the TCP, the Contract Documents and as directed by the Engineer.

B. Equipment which is in use, and required temporary storage within the limits of the project and materials stored or stockpiled on the project site shall be placed in a location which shall not be hazardous to the traveling public and as approved by the Engineer.

C. All vehicles and all construction equipment entering or leaving the Project site and/or work area must follow the traffic flow pattern as established by the Traffic Control Plan.

D. All construction operations shall be performed in the normal direction of traffic flow unless written permission is obtained from the Engineer prior to the commencement of such work. Work performed and equipment moving against the normal traffic flow pattern is strictly prohibited, unless a written exception is granted by the Engineer.

E. Upon completion and acceptance of the work or as the need for temporary traffic control devices ceases, the devices shall be removed by the Contractor in a timely manner and shall remain the property of the Contractor.

END OF SECTION 02040

SECTION 02600
DUCTILE IRON GRAVITY SEWER PIPE AND FITTINGS

PART 1: GENERAL

1.01 DESCRIPTION

This section covers ductile iron gravity sewer pipe for main sewers and service laterals. Ductile iron pipe shall be furnished complete with all fittings, jointing, materials, blocking, encasement and other necessary appurtenances. Ductile iron pipe is approved for all sewer diameters and shall be provided for all sewers through casings and tunnels.

1.02 RELATED SECTIONS

A. Section 02200 – Excavation, Backfill and Compaction
B. Section 02610 – PVC Gravity Sewer Pipe and Fittings
C. Section 02650 – Cured-in-Place Pipe Lining (CIPP)
D. Section 02700 – Precast Concrete Manholes
E. Section 02750 – Manhole Rehabilitation
F. Section 02760 – Maintenance of Sewer Flow
G. Section 02765 – Television Inspection
H. Section 02767 – Sewer Line Cleaning

1.03 SUBMITTALS

A. Shop Drawings and Product Data: Furnish completely dimensioned shop drawings, catalog cut or other data as required to provide a complete description of piping and piping specialties proposed to be used on the Contract work.

B. Certificates:

(1) Certified records or reports of results of shop tests, such records or reports to contain a sworn statement that shop tests have been made as specified, if required.

(2) Manufacturer's sworn certification that pipe will be manufactured in accordance with specified reference standards for each pipe type.

C. Manufacturer's Installation Instructions – Indicate special procedures required to install products specified.

1.04 QUALIFICATIONS AND QUALITY ASSURANCE

All ductile iron pipe and fittings shall be furnished by manufacturers who are fully experienced, reputable and qualified in the manufacture of the materials to be furnished. The pipe and fittings shall be designed, constructed and installed in accordance with the best practices and methods and shall comply with these Specifications.

The Contractor shall furnish in duplicate to the Engineer, prior to each shipment of pipe, unless otherwise approved by the Engineer, manufacturer's certification and certified test reports, that the pipe was manufactured and tested in accordance with the ASTM and ANSI-AWWA Standards specified herein.

The manufacturer is responsible for the performance of all inspection requirements as specified in ANSI/AWWA Standards. In addition, all pipe and fittings to be installed under this Contract may be inspected at the plant for compliance with these Specifications by an independent testing laboratory selected by and paid for by the Owner.

Inspection of the pipe and fittings will also be made by the Engineer or representative of the Owner after delivery. The pipe shall be subject to rejection at any time on account of failure to meet any of the Specification requirements, even though sample pipes may have been accepted as satisfactory at the place of manufacture. Pipe rejected after delivery shall be marked for identification and shall be removed from the job.

All pipe and fittings shall be permanently marked with the following information.

1. Manufacturer, date.
2. Size, type, class or wall thickness.
3. Standard produced to (ANSI/AWWA, ASTM, etc.)

PART 2: PRODUCTS

2.01 MATERIALS

Ductile iron pipe shall conform to the requirements of AWWA Standard C-151. Fittings shall be in accordance with AWWA C-110 or AWWA C-153.

Ductile iron pipe shall be furnished with push-on joints in accordance with AWWA C-11 or mechanical joints where necessary to join fittings and connect service laterals.

Restrained joints shall be required for all ductile iron pipe through casings and tunnels. Restrained joints shall be as manufactured by American (Flex-Ring, Lok-Fast or Lok-Ring), US Pipe (TR Flex), Griffin (Snap-Lok) or approved equal.

Ductile iron pipe shall be minimum Class 51 pipe. The pipe class and related wall thickness shall be selected based on the installation conditions and depths per ANSI/AWWA C151/A21.51. The pipe thickness shall be increased as necessary to accommodate the installation conditions. Pipe shall be supplied in lengths not in excess of 21 feet.

Interior Pipe Lining: The interior of all ductile iron pipe and fitting shall be lines as follows.

- ***8-inch-diameter and larger: All pipe to be lined with either ceramic epoxy lining or bonded polyethylene as specified by the Engineer. (Addendum #2)***

The interior linings/coatings shall meet the following requirement.

Cement Mortar Lining

Cement mortar lining shall be installed in accordance with AWWA C-104.

Epoxy Lining

The internal ceramic epoxy lining shall be PROTECTO 401 Ceramic Epoxy or approved equal. The epoxy lining shall be applied to a minimum 40 mils dry film thickness and shall cover the entire inside of the pipe from the inside shoulder of the gasket groove to the end of the spigot. The gasket groove and spigot end up to 6 inches back from the end of the spigot end shall be coated with PROTECTO Joint Compound or approved equal. The Joint Compound shall be applied with a brush to ensure coverage and shall be smooth. Fittings shall be coated from gasket groove to gasket groove.

The epoxy lining shall be applied only by a firm certified as an applicator by the epoxy manufacturer. Application of the epoxy lining to the ductile iron pipe shall be in strict accordance with the epoxy manufacturer's specifications and installation procedures. All pipe linings shall be checked for thickness using a magnetic film thickness gauge. The thickness testing shall be done using the method outlined in SSPC-PA-2 film thickness testing. The barrel of all pipe and fittings shall be pinhole detected with a nondestructive 2,500-volt pinhole test. Each pipe joint and fitting shall be marked with the date of application of the lining system and with its numerical sequence of application on that date. The pipe or fitting manufacturer must supply a certificate attesting to the fact that the Applicator met the requirements of this specification, that the material used was as specified, and that the material was applied as required by the specification.

All pinholes and damaged lined areas shall be repaired in accordance with written repair procedure furnished by the manufacturer of the lining material, so the repaired area is equal in performance to the undamaged lined areas.

The Owner reserves the right to reject any defective pipe delivered to the job site.

Polyethylene Lining

Pipe and fittings lined with polyethylene shall be Polybond*Plus* as manufactured by American Cast Iron Pipe Company.

The lining material for the pipe and fittings shall be virgin polyethylene complying with ASTM 1248 compounded with an inert filler and sufficient carbon black to resist ultraviolet rays. The polyethylene shall be bonded to the interior of the pipe and fittings by heat at the pipe manufacturer's plant. All surface areas to be lined shall be sandblasted clean prior to applying the polyethylene. The pipe and fittings shall be uniformly preheated to a temperature adequate to provide uniform fusing of the polyethylene powders and proper bonding to the pipe and fittings.

The lining at the ends shall be hermetically sealed and every pipe and fitting shall be subjected to and pass a 400 volt wet sponge or equivalent spark test. A sample cut from a production pipe shall pass the 4-hour boil adhesion test as described in ASTM C541.

Polyethylene linings shall cover the inner surface of the pipe and fittings. In pipe utilizing push-on gaskets, the lining shall extend from the spigot end through the socket to the edge of the gasket sealing area. In mechanical joint pipe, the lining shall extend from the spigot end through the socket to the edge of the gauging ring. The lining in fittings shall cover the interior surfaces including the socket areas as defined above. All bell areas which have not been lined shall be given one coat of 5 mils minimum (dry) thickness of epoxy coating Tnemec Series 20 Pota-Pox (Polyamide) or equal or as recommended by the pipe manufacturer. Polyethylene lining thickness shall be 60 mils nominal, 50 mils minimum. The lining shall be checked for thickness using a magnetic film thickness gauge. The thickness testing shall be done using the method outlined in SSPC-PA-2 film thickness testing.

All pinholes and damaged lined area shall be repaired in accordance with written repair procedure furnished by the manufacturer of the lining material, so the repaired area is equal in performance to the undamaged lined areas.

Each section of pipe shall be marked with the date of application of the lining system. The pipe or fitting manufacturer must supply a certificate attesting to the fact that the Applicator met the requirements of this specification, that the material used was as specified, and that the material was applied as required by the specification.

The Owner Reserves the right to reject any defective pipe delivered to the job site.

Exterior Coating: The exterior of buried pipe and fittings shall receive a bituminous coating as recommended by the pipe manufacturer and in accordance with ANSI A21.51 for pipe and ANSI A21.10 and A21.53 for fittings (minimum 1 mil thick).

Pipe Couplings: Pipe couplings will be required whenever the Contractor is repairing existing or new main sewers, when connecting new service laterals to existing sewers using a tee-wye, and when connecting new services to existing services. Pipe couplings

shall only be allowed in these specific circumstances. Couplings will not be allowed on new main sewers being installed from manhole to manhole or on new service laterals between the main sewer and cleanout. Pipe couplings shall be rubber sleeve couplings with stainless steel shear rings and compression bands as manufactured by Mission Products (or approved equal). Refer to Standard Detail No. 111 for additional requirements. Mechanical joint fittings shall be used for repairing new pipe installations.

Service Lateral Connections: All service lateral connections being installed as part of the new main sewer construction shall be connected to the main sewer using a tee-wye connection. Saddles shall not be allowed.

PART 3: EXECUTION

3.01 DELIVERY, STORAGE AND HANDLING

All pipe, fittings, valves and accessories shall be unloaded, stored and handled in accordance with AWWA C-600. Care shall be taken in loading, transporting and unloading to prevent injury to the pipe or coatings. Under no circumstances shall the pipe be dropped or skidded against each other. Slings, hooks or pipe tongs shall be padded and used in such a manner as to prevent damage to the exterior surface or internal lining of the pipe.

Materials, if stored, shall be kept safe from damage. The interior of all pipe, fittings and other appurtenances shall be kept free from dirt or foreign matter at all times.

Pipe shall not be stacked higher than the limits recommended by its manufacturer. The bottom tier shall be kept off the ground on timbers, rails or concrete. Pipe in tiers shall be alternated. At least two rows of 4-in by 4-in timbers shall be placed between tiers and chocks affixed to each end in order to prevent movement.

3.02 INSTALLING DUCTILE IRON PIPE AND FITTINGS

All pipe and fittings shall be examined before installing, and no pipe shall be installed which is found to be defective. All damage to the interior and exterior pipe coatings shall be repaired according to the manufacturer's recommendations and in a manner acceptable to the Engineer.

All ductile iron pipe shall be installed in accordance with requirements of AWWA Standard Specification C-600 except as otherwise specified herein. As soon as the excavation is completed to grade as indicated on the Drawings, the Contractor shall immediately place bedding material as specified in Section 02200 in the trench. The pipe shall be firmly bedded in AASHTO No. 57 stone to conform accurately to the line and grade indicated on the Drawings. Embedment of pipe shall conform to the Details. Bell holes shall be excavated so that after installation, only the pipe barrel shall bear upon the trench bottom. Proper selection and placement of bedding and backfill materials are necessary to minimize deflection of the pipe diameter. No blocking under the pipe will be permitted.

All pipe and fittings shall be sound and shall be clean before installation.

Pipe shall be laid to the true lines and grades shown on the Drawings with bedding and backfill as shown in Standard Detail No. 100 and as specified in Section 02200. Each section of pipe shall be laid to true alignment and grade as shown and specified on the Drawings. Pipe elevations and location shall be checked immediately upon setting the pipe in the trench, and the location and elevation of each pipe shall be adjusted to meet the true alignment and grade specified. If the pipe is not installed to the true lines and elevations, the Engineer shall decide on appropriate corrective measures. Such corrective measures may require that the installed sewer be removed and re-installed correctly. The Engineer's decision shall be final and no additional payment or time shall be due the Contractor to comply with the Engineer's decision.

Under no circumstances shall the pipe be dropped into the trench.

Jointing Ductile-Iron Pipe

1. Push-on joints and restrained joints shall be made in strict accordance with the manufacturer's instructions. Pipe shall be laid with bell ends looking upstream. A rubber gasket shall be inserted in the groove of the bell end of the pipe, and the joint surfaces cleaned and lubricated. The plain end of the pipe is to be aligned with the bell of the pipe to which it is to be joined, and pushed home with a jack or by other means. After joining the pipe, a metal feeler shall be used to make certain the rubber gasket is correctly located.

2. Mechanical joints shall be in accordance with the "Notes on Method of Installation" under ANSI Specification A21.11 and the instructions of the manufacturer. To assemble the joints in the field, thoroughly clean the joint surfaces and rubber gasket with soapy water before tightening the bolts. All mechanical joint hardware shall be stainless steel. Bolts shall be tightened to the specified torques. Under no condition shall extension wrenches or pipe over the handles of ordinary ratchet wrenches be used to obtain greater leverage.

Before any joint is made, the pipe shall be checked to assure a close joint with the next adjoining pipe has been maintained, and the inverts are matched and conform to the required grade. The pipe shall not be driven down to grade by striking it.

When cutting pipe is required, the cutting shall be done by machine, leaving a smooth cut at right angles to the axis of the pipe. Cut ends of pipe to be used with a push-on bell shall be beveled to conform to the manufactured spigot end. Damaged interior and exterior coatings shall be fully repaired according to the manufacturer's recommendations and in a manner acceptable to the Engineer. At a minimum, the disturbed area shall be given one coat of 5 mils (dry) thickness of epoxy coating Tnemec Series 20 Pota-Pox (Polyamide) or equal.

When installation is not in progress, or the potential exists for dirt or debris to enter the pipe, the open ends of the pipe shall be closed with a plug or other approved means.

Refer to Section 02200 for additional requirements.

3.03 ACCEPTANCE TESTS

The following acceptance tests shall be performed to verify proper installation of the new ductile iron pipes.

1. All new main sewers installed from manhole to manhole shall be tested via low pressure air testing in accordance with ASTM C-828 and C-924 except that the maximum allowable pressure drop during the test shall be 0.5 psi as further defined herein. The tests shall be performed from manhole to manhole and include any service laterals connecting to the main sewer. To perform the test, plugs shall be installed at each manhole and at cleanouts installed at the edge of the property line and road or sewer right-of-way, and the isolated sewers shall be tested as a system. The Owner will provide the pressure gauges to use for the testing. The Owner/Engineer must witness all testing.

   The air test pressure specified in ASTM C-828 shall be increased by 0.5 psi for every foot of ground water above the crown of the sewer pipe. If ground water levels cannot be determined in the field, the test pressures shall be increased by a minimum of 1 psi.

   The air testing shall be performed by plugging all main sewers at the manholes and service laterals at the cleanouts. Add air to the isolated section of sewer until the internal pressure of the line is raised to approximately 4.0 psi (plus 0.5 psi for every foot of water above the sewer). After the pressure is reached, allow the pressure to stabilize. The pressure will normally drop as the air temperature stabilizes. This usually takes 2 to 5 minutes depending on the pipe size. The pressure may be reduced to 3.5 psi (plus 0.5 psi for every foot of water above the sewer) before starting the test.

   When the pressure has stabilized and is at or above the starting test pressure of 3.5 psi (plus 0.5 psi for every foot of water above the sewer), start the test. If the pressure drops more than 0.5 psi during the test duration shown in Table 1 below, the line is presumed to have failed the test. If a 0.5 psi drop does not occur within the required test duration, the line has passed the air test. Table 1 is an excerpt from ASTM C-828 and C-924 and shall be included on the Contractor's test reports. The length of sewer for the test durations shall be the total length tested including service laterals. Refer to ASTM C-828 and C-924 for additional requirements.

TABLE 1. MINIMUM AIR TEST DURATION FOR VARIOUS PIPE DIAMETERS (ASTM C-828 AND C-924)	
NOMINAL PIPE SIZE (inches)	TIME (minutes per 100 feet of pipe tested)
4	0.3
6	0.7
8	1.2
10	1.5
12	1.8
15	2.1
18	2.4
21	3.0
24	3.6
27	4.2
30	4.8
33	5.4
36	6.0
39	6.6
42	7.3
48	8.0
54	8.7
60	9.4
66	10.1
72	10.8

EXAMPLE: Testing 8" main sewer 275 feet long with one 4" service lateral 25 feet long

Test Time = 8" sewer + 4" sewer
= [1.2 x (275 ft/100)] + [0.3 x (25 ft/100)]
= 3.4 minutes

2. Service laterals connecting to manholes shall be tested via low pressure air testing in accordance with ASTM C-828 and C-924 as specified above. The test shall be performed by installing a plug in the lateral at the manhole and at the cleanout installed at the edge of the property line and road or sewer right-of-way. Contractor shall provide complete testing equipment, but Owner reserves the right to provide the pressure gauges to use for the testing. The Owner/Engineer must witness all testing.

3. All new main sewers and service laterals shall be inspected via closed circuit television (CCTV) inspection in accordance with Specification Section 02765 – Television Inspection.

3.04 REPAIRING NEW PIPE INSTALLATIONS

Any defective pipe or unacceptable installations as determined from the acceptance testing and/or field inspections shall be repaired by the Contractor at no additional cost to the Owner. The repair method shall be acceptable to and approved by the Engineer/Owner. The Contractor shall submit all proposed repair procedures to the Engineer/Owner for review and approval prior to performing any repair work. At a minimum, mechanical joint couplings will be required to connect any short repair sections to the new sewers. No rubber sleeve style couplings will be acceptable.

END OF SECTION 02600

SECTION 02610
POLYVINYL CHLORIDE (PVC) GRAVITY SEWER PIPE AND FITTINGS

PART 1: GENERAL

1.01 DESCRIPTION

A. This section covers polyvinyl chloride (PVC) gravity sewer pipe for main sewers and service laterals. PVC pipe shall be furnished complete with all fittings, jointing materials, blocking, encasement and other necessary appurtenances. PVC pipe shall be acceptable for sewers up to 12 inches in diameter with depths of cover not less than 4 feet or more than 20 feet. In some instances, the Engineer/Owner may approve the use of C-900 PVC (as specified herein) at depths of cover less than 4 feet and more than 20 feet.

1.02 RELATED SECTIONS

A. Section 02200 – Excavation, Backfill and Compaction
B. Section 02600 – Ductile Iron Gravity Sewer Pipe and Fittings
C. Section 02650 – Cured-in-Place Pipe Lining (CIPP)
D. Section 02700 – Precast Concrete Manholes
E. Section 02750 – Manhole Rehabilitation
F. Section 02760 – Maintenance of Sewer Flow
G. Section 02765 – Television Inspection
H. Section 02767 – Sewer Line Cleaning

1.03 SUBMITTALS

A. Shop Drawings and Product Data: Furnish completely dimensioned shop drawings, catalog cut or other data as required to provide a complete description of piping and piping specialties proposed to be used on the Contract work.

B. Certificates:

(1) Certified records or reports of results of shop tests, such records or reports to contain a sworn statement that shop tests have been made as specified, if required.

(2) Manufacturer's sworn certification that pipe will be manufactured in accordance with specified reference standards for each pipe type.

C. Manufacturer's Installation Instructions – Indicate special procedures required to install products specified.

1.04 REFERENCE SPECIFICATIONS, CODES AND STANDARDS

A. American Society for Testing and Materials.

(1) ASTM D 2321, Recommended Practice for Underground Installation of Flexible Thermoplastic Sewer Pipe.

(2) ASTM D 2564, Solvent Cements for Poly (Vinyl Chloride) (PVC) Plastic Pipe and Fittings.

(3) ASTM D 3034, Specification for Type PSM Poly (Vinyl Chloride) (PVC) Sewer Pipe and Fittings.

(4) ASTM D 3212, Specification for Joints for Drain and Sewer Plastic Pipes Using Flexible Elastomeric Seals.

(5) ASTM F 477, Specification for Elastomeric Seals (Gaskets) for Joining Plastic Pipe.

(6) ASTM F 789, Specification for Type PS-46 Poly (Vinyl Chloride) (PVC) Plastic Gravity Flow Sewer Pipe and Fittings.

(7) ASTM F 794, Standard Specification for Poly (Vinyl Chloride) (PVC) Profile Gravity Sewer Pipe and Fittings Based on Controlled Inside Diameter.

B. American Water Works Association

(1) AWWA C-900, "Polyvinyl Chloride (PVC) Pressure Pipe, 4-inch through 12-inch, for water.

(2) AWWA C-905, "Polyvinyl Chloride (PVC) Pressure Pipe, 14-inch through 30-inch, for water.

1.05 QUALITY ASSURANCE

A. **Manufacturer's Qualifications:** All PVC pipe and fittings shall be furnished by manufacturers who are fully experienced, reputable and qualified in the manufacture of the material to be furnished. The pipe and fittings shall be designed, constructed and installed in accordance with the best practices and methods and shall comply with these Specifications.

The Contractor shall furnish in duplicate to the Engineer, prior to each shipment of pipe unless otherwise approved by the Engineer, manufacturer's certification and certified test reports that the pipe was manufactured and tested in accordance with the ASTM and ANSI/AWWA Standards specified herein.

The manufacturer is responsible for the performance of all inspection requirements as specified in the ASTM and ANSI/AWWA Standards. In addition, all pipe and fittings to be installed under this Contract may be inspected at the plant for compliance with these

Specifications by an independent testing laboratory selected by and paid for by the Owner. Inspection of the pipe and fittings will also be made by the Engineer or representative of the Owner after delivery. The pipe shall be subject to rejection at any time on account of failure to meet any of the Specification requirements, even though sample pipes may have been accepted as satisfactory at the place of manufacture. Pipe rejected after delivery shall be marked for identification and shall be removed from the job.

All pipe and fittings shall be permanently marked with the following information:

(1) Manufacturer, date;
(2) Size, type, class or wall thickness;
(3) Standard produced to (ANSI/AWWA, etc).

PART 2: PRODUCTS

2.01 MATERIALS

A. **PVC Pipe**: PVC pipe shall be solid wall pipe. PVC pipe may be any of the pipe types listed below. The pipe type shall be as specified by the Engineer on the Drawings or shall be the Contractor's option.

(1) PVC pipe with a Standard Dimension Ratio (SDR) of 35 meeting all requirements of ASTM D-3034, Cell Classification 12454-B. Fittings shall be in accordance with ASTM D-3034, F-679 and/or D-3212 as applicable with stiffness and wall thickness equal to or greater than the pipe

(2) PVC pipe and fittings conforming to AWWA C-900, "Polyvinyl Chloride (PVC) Pressure Pipe, 4-inch through 12-inch, for Water". The pressure class shall meet the requirements of 150 psi (minimum) and shall comply with a SDR of 18 (minimum).

(3) PVC pipe and fittings conforming to AWWA C-905, "Polyvinyl Chloride (PVC) Pressure Pipe, 14-inch through 36-inch, for Water". The pressure class shall meet the requirements of 165 psi (minimum) and shall comply with a SDR of 25 (minimum).

(4) Schedule 40 or 80 PVC pipe (for 4" and 6" service lateral pipes only).

Pipe joining (except for solvent welded joints) shall be push-on elastomeric joints only. Joints shall be manufactured in accordance with ASTM D-3212. The pipe shall be furnished with integral bells with gaskets that are permanently installed at the factory. The pipe shall be furnished in nominal lengths of 13 feet.

All fittings and accessories shall be furnished to one pipe supplier and shall have bell and/or spigot configurations compatible with the pipe. All fittings shall have the same or greater SDR and stiffness as the main pipe.

B. **Pipe Couplings:** Pipe couplings will be required whenever the Contractor is connecting new PVC service laterals to existing services. Pipe couplings shall only be allowed in these specific circumstances for PVC pipe. Couplings will not be allowed on new main sewers being installed from manhole to manhole or on new service laterals between the main sewer and cleanout. Pipe couplings shall be rubber sleeve couplings with stainless steel shear rings and compression bands as manufactured by Mission Products or approved equal. Refer to Detail No. 111 for additional requirements.

C. **Service Lateral Connections:** All service lateral connections being installed as part of the new main sewer construction shall be connected to the main sewer using a tee-wye connection. Saddles shall not be allowed. Where PVC lateral pipe is connected to DIP main sewer, transition gaskets (MJ x SDR 35) shall be used. Gaskets shall be as manufactured by Harrington Corporation or equal.

PART 3: EXECUTION

3.01 PREPARATION

A. Pipe bedding shall be prepared in accordance with Specification Section 02200 and Detail No. 100.

3.02 INSTALLATION/APPLICATION

A. **Installing PVC Pipe and Fittings:** All pipe and fittings shall be examined before installing, and no pipe shall be installed which is found to be defective. All pipe and fittings shall be sound and shall be clean.

All PVC pipe shall be installed in accordance with the manufacturer's specifications and as specified herein. As soon as the excavation is completed to grade, as indicated on the Drawings, the Contractor shall immediately place bedding material as specified in Section 02200 in the trench. The pipe shall be firmly bedded in #57 stone to conform accurately to the line and grade indicated on the Drawings. Embedment of pipe shall conform to the Details and ASTM D-2321, "Recommended Practice for Underground Installation of Flexible Thermoplastic Sewer Pipe". Bell holes shall be excavated so that after installation, only the pipe barrel shall bear upon the trench bottom. Proper selection and placement of bedding and backfill materials are necessary to minimize deflection of the pipe diameter. No blocking under the pipe will be permitted.

Pipe shall be laid to the true lines and grades shown on the Drawings with bedding and backfill as shown in the Standard Detail No. 100 and as specified in Section 02200. Each section of pipe shall be laid to true alignment and grade as shown and specified on the Drawings. Pipe elevations and locations shall be checked immediately upon setting the pipe in the trench, and the location and elevation of each pipe shall be adjusted to meet the true alignment and grade specified. If the pipe is not installed to the true lines and elevations, the Engineer shall decide on appropriate corrective measures. Such corrective measures may require the installed be removed and re-installed correctly. The Engineer's

decision shall be final and no additional payment or time shall be due the Contractor to comply with the Engineer's decision.
No single piece of pipe shall be laid unless it is straight. If a piece of pipe is not straight, it shall be rejected and removed from the site.

Under no circumstances shall the pipe be dropped into the trench.

Push-on joints shall be made in strict accordance with the manufacturer's instructions. Pipe shall be laid with bell ends looking upstream. The interior of the pipe and the jointing seal shall be free from sand, dirt and trash before installing in the line. Extreme care must be taken to keep the bells of the pipe free from dirt and rocks, so joints may be properly assembled without over-stressing the bells. Each length of the pipe shall be shoved home against the pipe previously laid and held securely until enough backfill has been placed to hold the pipe in place. Joints shall not be "pulled" or "cramped". Before any joint is made, the pipe shall be checked to assure that a close joint with the next adjoining pipe has been maintained, and the inverts are matched and conform to the required grade. The pipe shall not be driven down to grade by striking it.

The Contractor shall cut PVC pipe with appropriate cutting equipment where necessary to cut and machine all PVC pipe in the field. A "full insertion mark" shall be provided on each field cut pipe end.

When installation is not in progress, or the potential exists for dirt of debris to enter the pipe, the open ends of the pipe shall be closed with a plug or other approved means.

Refer to Section 02200 for additional requirements.

3.03 FIELD QUALITY CONTROL

A. Delivery, Storage and Handling: Care shall be taken in loading, transporting and unloading to prevent injury to the pipe. Under no circumstances shall the pipe be dropped or skidded against each other. Slings, hooks or pipe tongs shall be padded and used in such a manner as to prevent damage.

Materials, if stored, shall be kept safe from damage. The interior of all pipe, fittings and other appurtenances shall be kept free from dirt or foreign matter at all times.

Pipe shall not be stacked higher than the limits recommended by its' manufacturer. The bottom tier shall be kept off the ground on timbers, rails or concrete. Pipe in tiers shall be alternated. At least two rows of 4-inch by 4-inch timbers shall be placed between tiers and chocks affixed to each end in order to prevent movement.

3.04 INSPECTION

A. **ACCEPTANCE TESTS:** All PVC sewers shall be air tested and inspected via closed circuit television.

The following acceptance tests shall be performed to verify proper installation of the new polyvinyl chloride (PVC) pipes.

1. All new main sewers installed from manhole to manhole shall be tested via low pressure air testing in accordance with ASTM C-828 and C-924 except that the maximum allowable pressure drop during the test shall be 0.5 psi as further defined herein. The tests shall be performed from manhole to manhole and include any service laterals connecting to the main sewer. To perform the test, plugs shall be installed at each manhole and at cleanouts installed at the edge of the property line and road or sewer right-of-way, and the isolated sewers shall be tested as a system. The Owner will provide the pressure gauges to use for the testing. The Owner/Engineer must witness all testing.

   The air test pressure specified in ASTM C-828 shall be increased by 0.5 psi for every foot of ground water above the crown of the sewer pipe. If ground water levels cannot be determined in the field, the test pressures shall be increased by a minimum of 1 psi.

   The air testing shall be performed by plugging all main sewers at the manholes and service laterals at the cleanouts. Add air to the isolated section of sewer until the internal pressure of the line is raised to approximately 4.0 psi (plus 0.5 psi for every foot of water above the sewer). After the pressure is reached, allow the pressure to stabilize. The pressure will normally drop as the air temperature stabilizes. This usually takes 2 to 5 minutes depending on the pipe size. The pressure may be reduced to 3.5 psi (plus 0.5 psi for every foot of water above the sewer) before starting the test.

   When the pressure has stabilized and is at or above the starting test pressure of 3.5 psi (plus 0.5 psi for every foot of water above the sewer), start the test. If the pressure drops more than 0.5 psi during the test duration shown in Table 1 below, the line is presumed to have failed the test. If a 0.5 psi drop does not occur within the required test duration, the line has passed the air test. Table 1 is an excerpt from ASTM C-828 and C-924 and shall be included on the Contractor's test reports. The length of sewer for the test durations shall be the total length tested including service laterals. Refer to ASTM C-828 and C-924 for additional requirements.

TABLE 1. MINIMUM AIR TEST DURATION FOR VARIOUS PIPE DIAMETERS (ASTM C-828 AND C-924)	
NOMINAL PIPE SIZE (inches)	TIME (minutes per 100 feet of pipe tested)
4	0.3
6	0.7
8	1.2
10	1.5
12	1.8
15	2.1
18	2.4
21	3.0
24	3.6
27	4.2
30	4.8
33	5.4
36	6.0
39	6.6
42	7.3
48	8.0
54	8.7
60	9.4
66	10.1
72	10.8

EXAMPLE: Testing 8" main sewer 275 feet long with one 4" service lateral 25 feet long

Test Time = 8" sewer + 4" sewer
= [1.2 x (275 ft/100)] + [0.3 x (25 ft/100)]
= 3.4 minutes

2. Service laterals connecting to manholes shall be tested via low pressure air testing in accordance with ASTM C-828 and C-924 as specified above. The test shall be performed by installing a plug in the lateral at the manhole and at the cleanout installed at the edge of the property line and road or sewer right-of-way. Contractor shall provide complete testing equipment, but Owner reserves the right to provide the pressure gauges to use for the testing. The Owner/Engineer must witness all testing.

3. All new main sewers and service laterals shall be inspected via closed circuit television (CCTV) inspection in accordance with Specification Section 02765 – Television Inspection.

In addition, all main PVC sewers (D-3034, C-900 or C-905 PVC pipe) may be tested for deflection with a 5% mandrel at the Town's/Engineer's request at no additional cost. The Town will provide the mandrel for the test. The mandrel test shall not be performed until at least 30 days after the pipe has been backfilled. The Contractor shall pull the mandrel through each section of pipe from manhole to manhole. The mandrel must slide freely through the pipe with only a nominal hand force applied. No mechanical device shall be used in pulling the mandrel. Any pipe which refuses the mandrel shall be repaired in a manner approved by and/or required by the Engineer. The Engineer/Owner shall witness all tests.

During the warranty period, the Town may elect to perform a follow-up mandrel pull at the Town's expense. The Contractor will be required to correct any deficiencies found during the warranty period testing.

3.05 REPAIRING NEW PIPE INSTALLATION

A. Any defective pipe or unacceptable installations as determined from the acceptance testing and/or field inspections shall be repaired by the Contractor at no additional cost to the Owner. The repair method shall be acceptable to and approved by the Engineer/Owner and shall be in compliance with Details shown on the Contract Drawings unless otherwise approved by the Town/Engineer. The Contractor shall submit all proposed repair procedures to the Engineer/Owner for review and approval prior to performing any repair work. The Contractor must obtain approval from Town/Engineer in writing before performing any repair work. At a minimum, mechanical joint fittings will be required to connect any short repair sections to the new sewers – no rubber sleeve style coupling will be acceptable.

END OF SECTION 02610

SECTION 02650
CURED-IN-PLACE PIPE LINING (CIPP)

PART 1: GENERAL

1.01 DESCRIPTION

A. Work Included:

(1) The purpose of this work is to provide for the lining of a portion of the Town of Thurmont sanitary sewer system. The work covered by this Contract also includes connection of existing laterals to the new liner and all restoration work. The location of all work to be performed will be as detailed on the Contract Drawings. The acceptable method of lining shall be the cured-in-place lining method.

(2) The Work included under this Contract consists of furnishing all equipment, supplies, labor, transportation, fuel and power; and performing all Work as required by the Contract, in strict accordance with the Specifications, which are made a part hereof. The Work shall be complete, and all work, materials and services not expressly called for in the Specifications which may be necessary for complete and proper services to carry out the Contract in good faith, shall be performed, furnished and installed by the Contractor at no additional cost to the Owner. Qualified, careful and experienced workers shall perform the Work in the best and most workmanlike manner. All Work must be performed without disrupting the operation of the sewer system.

B. Extent of Lining Work:

(1) The Work includes the following items, which are to be performed in accordance with these Specifications

a. Relining of the pipe sections from manhole to manhole - total length as shown on the plans and specifications (Bid Form).

b. Reconnection of laterals to the relined sewer.

c. All restoration work.

(2) All Work must be performed without disrupting the operation of the sanitary sewer system or unnecessarily disrupting traffic through streets or highways. The Owner will have an inspector on-site during the Contractor's performance of the Work.

(3) All Work must meet with the approval of the Engineer/Owner. The Contractor shall be completely responsible for restoring to original condition all areas where his equipment has caused damages of any type.

(4) All Work must be done without disrupting the operation of the sanitary sewer system. Therefore, the Contractor shall be responsible for any necessary by-passing of sewage flows during the course of this Work. Each Bidder should visit the project site to determine special problems or requirements and take such factors into account when preparing his Bid.

C. Cured in Place Pipe Installation:

(1) The intent of the cured-in-place installation is to rehabilitate the sanitary sewer lines with flexible polyester felt tubes that are saturated with a thermosetting resin that is cured with hot water/steam or seamless spirally-wound fiberglass tubes saturated with resin that is cured with ultraviolet light. When cured and complete, the installed pipe should extend from one manhole to the next in a continuous, tight-fitting, watertight pipe-within-a-pipe.

(2) If so desired by the Town, and at the expense of the Contractor, the Contractor shall furnish, prior to use of the materials, satisfactory evidence from an approved testing laboratory or approved source, the results of testing the proposed materials in conformance with these specifications. Any material failing to meet any of the requirements of this specification may be rejected.

(3) All CIPP will be installed in one sewer segment (manhole to adjacent manhole) at a time. Contractor may request approval to line up to two segments at one time for specific lines. Engineer/Town will review and determine if this is acceptable on a case by case basis. All determinations by the Engineer/Town will be final.

1.02 RELATED SECTIONS

A. Section 02600 – Ductile Iron Gravity Sewer Pipe and Fittings
B. Section 02610 – PVC Gravity Sewer Pipe and Fittings
C. Section 02700 – Precast Concrete Manholes
D. Section 02750 – Manhole Rehabilitation
E. Section 02760 – Maintenance of Sewer Flow
F. Section 02765 – Television Inspection

1.03 SUBMITTALS

A. Shop Drawings and Product Data: Furnish completely dimensioned shop drawings, cuts or other data as required to provide a complete description of Products to be installed.

B. Certificates: Certified records or reports of results of shop tests, of which such records or reports are to contain a sworn statement that shop tests have been made as specified.

C. Written certification from the manufacturer that the Contractor has been trained by the manufacturer to handle/install, and apply their products.

The Contractor shall submit complete shop drawings of CIPP to demonstrate compliance with these specifications, to show materials of construction (including resins, catalysts, etc.) and to detail installation procedures. Installation procedures shall include acceptable inversion heads and pressures, heating ("cooking") and cool-down procedures and temperatures, times for each stage of the process, and cure logs for the resin/resin system used. The Contractor shall provide this information without delay or claim to any confidentiality. Testing procedures and quality control procedures shall also be submitted.

Certifications that the CIPP was manufactured in accordance with these specifications and the appropriate ASTM standards shall be submitted with each shipment. The certifications shall include a signed statement by the wet-out manager/supervisor that no fillers were added to the resin system during manufacture of the CIPP. In addition, wet-out forms documenting the wet-out shall be submitted for each section of CIPP manufactured. The wet-out forms shall be submitted prior to requesting payment and shall be provided without delay or claim to any confidentiality. The wet-out forms shall document the date and time of wet-out, the wet-out supervisor, the wet-out facility address, the location where the CIPP will be installed (by manhole numbers), the CIPP diameter, the length of wet-tube and dry-tube, the thickness of the CIPP, the roller gap setting for establishing the liner thickness, the felt manufacturer, the resin used (by product name and batch/shipment number) and quantity, the catalyst(s) used (by product name) and quantity, quality control samples taken and all else pertinent to the wet-out process.

1.04 REFERENCE SPECIFICATIONS, CODES AND STANDARDS

A. American Society for Testing and Materials (ASTM)
The following American Society for Testing and Materials (ASTM) standards are referenced herein.

ASTM D790 – Standard Test Method for Flexural Properties of Unreinforced and Reinforced Plastics and Electrical Insulating Materials.

ASTM D2412 – Standard Test Method for Determination of External Loading Characteristics of Plastic Pipe by Parallel-Plate Loading

ASTM F1216 – Standard Practice for Rehabilitation of Existing Pipelines and Conduits by the Inversion and Curing of a Resin-Impregnated Tube

ASTM D-453 – Standard Test Methods for Chemical Resistance of Plastics

ASTM D-638 – Standard Test Methods for Tensile Properties of Plastic

ASTM F2019 – Standard Practice for Rehabilitation of Existing Pipelines and Conduits by the Pulled in Place Installation of Glass Reinforced Plastic (GRP) Cured-in-Place Thermosetting Resin Pipe (CIPP). The ASTM F1417 testing should be replaced by APS Water Porosity testing.

ASTM D3567 – Standard Practice for Determining Dimensions of "Fiberglass" (Glass-Fiber-Reinforced Thermosetting Resin) Pipe and Fittings

ASTM D2990 – Standard Test Methods for Tensile, Compressive and Flexural Creep and Creep-Rupture of Plastics. The DIN EN 761 Plastic Piping Systems shall be used for Determination of Creep Factor Under Dry Conditions for Glass-Reinforced Thermosetting Plastic (GRP) Pipes

APS Water Porosity Standard

Where reference is made to one of the above standards, the revision in effect at the time of bid opening shall apply.

1.05 QUALITY ASSURANCE

A. Installer's Qualifications

The Contractor performing the CIPP lining work shall be fully qualified, experienced and equipped to complete this work expeditiously and in a satisfactory manner. The Contractor shall be certified and/or licensed by the manufacturer as an Installer of the type of CIPP proposed on this Project for a minimum of two years. The full-time on-site superintendent/foreman that will supervise the CIPP installation must be personally trained and certified/licensed by the manufacturer for installation of their product. A list of product installations by the Contractor and proposed superintendent including quantities installed, dates of installation and references (name, address and phone numbers) shall be submitted.

B. Design Criteria:

(1) The pipe lining shall be installed prior to manhole lining and both materials shall be compatible.

(2) The line shall be installed once open cut section replacement has been tested and accepted, if applicable to that pipe section.

(3) The lining system must be designed to withstand the structural loading of the ground and groundwater stresses, assuming a fully deteriorated gravity sewer pipe condition.

(4) The lining system must fit tight against the interior of the existing sewer pipe with no annular space allowed. The lined sewer must be capable of carrying at least 90% of the original sewer pipe capacity. Calculations of the carrying capacity of the line pipe shall be included in the shop submittals for the lining system.

(5) Sealing Pipe in Manholes: If, due to broken or misaligned sewer pipe at the manhole, the installed pipe fails to make a tight seal, the Contractor shall apply a sealant at that point. The sealant shall be of a resin mixture compatible with that

used in the inversion process. Also install a Insignia End Seal by LMK Technologies at each sewer main entry point to manhole. Reference Detail 120.

In some cases, CIPP will need to be sealed to manholes that were lined under previous contracts. Contractor shall recommend and submit a sealant that is compatible with the CIPP and existing liner and application shall result in a watertight seal.

(6) Service Connection: After curing (and after the pressure test specified below), the Contractor shall reinstate the existing live building sewer laterals. This shall generally be done without excavation, from the interior of the pipe by means of a television camera and cutting device that reinstates the building sewers to not less than 100% of their original capacity.

1.06 WARRANTY

The liner system shall be free from defects and/or infiltration resulting from product defects or installation workmanship. Contractor/Manufacturer shall provide a two-year guarantee that the liner will remain free of these defects and/or infiltration.

PART 2: PRODUCTS

2.01 MATERIALS

A. Transport, handle and store materials and products specified herein in a manner recommended by the respective manufacturers of such to prevent damage and defects.

B. The liner shall be fabricated to be uniform in thickness and conform to the interior of existing pipes as shown on the Contract Drawings.

C. The liner shall consist of the minimum following ASTM properties:

Property	Minimum Values	Test Method
Tensile Strength	3,000 psi	ASTM D-638
Flexural Strength	4,500 psi	ASTM D-790 Mod
Modulus of Elasticity	250,000 psi	ASTM D-790 Mod
Chemical Resistance	Loss not to exceed the above values	ASTM D-453

D. The liner tube shall be homogenous across the entire wall thickness and shall not contain intermediate or encapsulated elastomeric layers. The tube shall not be made up of materials that may cause delamination in the cured-in-place process.

E. The wall color of the interior pipe surface after installation shall be a light reflective color, so that a clear detail examination with closed circuit television inspection

equipment may be made.

F. The resin shall meet the requirements of ASTM F-1216.

G. Approved line systems are as follows:

(1) Premier-Pipe USA;
(2) Insituform Technologies, Inc., Memphis, Tennessee;
(3) In Liner USA, Houston, Texas,
(4) Blue Tek,
(5) Or approved equal cured-in-place pipe system.

The above products shall adhere to all requirements specified herein and shall be modified as necessary to meet these requirements.

H. Flexible Polyester Felt Tube Saturated with Thermosetting Resin

The liner shall be composed of tubing material consisting of one or more layers of a flexible non-woven polyester felt with or without other additives such as fiberglass or other reinforcing additives. The felt tubing shall be impregnated with a thermosetting isothalic polyester resin and catalyst or vinyl ester and catalyst. The liner material and resin shall be completely compatible. The inside and/or outside layer of the tube shall be coated with an impermeable material compatible with the resin and fabric. The liner shall cure in the presence of water at the required temperature for the resin system. Steam-cure shall not be allowed.

The felt material shall be manufactured by companies specializing in felt production for CIPP. The manufacturer shall have manufactured felt material for CIPP for at least 2 years as documented by references. The felt manufacturer, references and location of the manufacturing facility shall be submitted to the Engineer for review and approval. The felt material manufacturer and facility shall not change throughout the duration of the Contract unless specifically approved by the Engineer in writing.

The polyester or vinyl ester resin shall be PREMIUM, NON-RECYCLED resin only. PET resins or those containing fillers, additives or enhancement agents shall not be used. The resin manufacturer shall not include any old resin or rework in the product shipped to the wet-out facility. The resin shall be manufactured under ISO 9002 certified procedures. Such certification shall be submitted to the Engineer for each shipment of resin to the wet-out facility. The proposed resin shall equal or exceed the published properties of Reichhold Polylite 33420 resin (for isothalic polyester resin) or Reichhold Atlac 580-20 (for vinyl ester resin).

The exact makeup of the resin shall be submitted to the Engineer including chemical resistance information, cure logs and temperatures. Polyester resins shall have a minimum Heat Distortion Temperature of 212 degrees Fahrenheit per ASTM D648. Vinyl ester resins shall have a minimum Heat Distortion Temperature of 220 degrees Fahrenheit per ASTM D648.

The exact mixture ratio of resin and catalyst shall also be submitted. The catalyst system shall be identified by product name. The resin/catalyst ratio shall be approved by the resin manufacturer in writing. The catalyst system shall be made up of a primary catalyst and a secondary catalyst. The primary catalyst shall be Akzo perkadox 16 or approved equal and shall be added at a maximum of 1% of the resin volume by weight unless otherwise approved by the Engineer. The secondary catalyst shall be Akzo Trigonox or approved equal and shall be added at a maximum of 0.5% of the resin volume by weight unless otherwise approved by the Engineer. The resin/catalyst system shall be formulated so the CIPP will cure as specified below. Quick-cure or accelerated resin systems that cure in half the specified time or substantially quicker than the minimum 3 hours specified below will not be allowed. Quick-cure resin systems include those formulated by substantially increasing the amount of catalysts from that specified above. Resins, catalysts and resin/catalysts mixing ratios shall not be changed during this Contract unless specifically approved by the Engineer in writing.

The cure schedules for the CIPP shall be submitted to the Engineer for review. The curing process/schedules shall be approved by the resin manufacturer in writing. The cure schedules shall include specific information on stepping the temperature up to "cooking" temperatures, "cooking" temperatures and durations, and cool-down procedures, all of which are to be approved in writing by the resin manufacturer. The CIPP shall cure in the presence of water only. The minimum cure/"cook" time shall be 3 hours at 180 degrees F. The cure time shall be increased as deemed necessary by the Contractor/resin manufacturer, including but not limited to, longer CIPP installations, active ground water infiltration into the existing sewers, pipe type, pipe location, etc.

The resin shall be shipped directly from the resin manufacturer's facility to the CIPP wet-out facility. The resin shall not be sent to any intermediate mixing facility. Copies of the shipment documents from the resin manufacturer shall be submitted to the Engineer showing dates of shipment, the originating location and the receiving location.

The resin shall be used to manufacture the CIPP as shipped. No fillers or additives shall be added at the wet-out facility except for the required catalyst as recommended by the resin manufacturer. The Contractor shall submit a Certificate of Authenticity from the resin manufacturer for each shipment to the wet-out facility (to include the date of manufacture and the Heat Distortion Temperature). This information shall be submitted prior to manufacturing any CIPP.

The Contractor shall identify the wet-out facility where all CIPP under this Contract will be manufactured. All CIPP shall be manufactured from this designated wet-out facility throughout the entire Contract unless specifically approved otherwise by the Engineer in writing. Multiple wet-out facilities shall not be allowed.
When cured, the CIPP shall form a continuous, tight-fitting, hard, impermeable liner which is chemically resistant to any chemicals normally found in domestic sewage. The liner shall be chemically resistant to trace amounts of gasoline and other oil products commonly found in municipal sewerage and soils adjacent to the sewer pipe to be lined.

The CIPP shall be fabricated to a size that will tightly fit the sewer being rehabilitated after being installed and cured. The line shall be capable of fitting into irregularly shaped pipe sections and through bends and dips within the pipeline. Allowance for longitudinal and circumferential expansion shall be taken into account when sizing and installing the liner. All dimensions shall be verified in the field by the Contractor prior to fabrication of the liner. Field measurements shall be used to ensure maximum closure between the new liner and the existing sewer pipe. There shall be no leakage of groundwater between the existing pipe and the CIPP at the manhole connection or service lateral connections. Any leakage found shall be eliminated by the Contractor at no additional cost to the Owner.

The application of the resin to the felt tubing (wet-out) shall be conducted under factory conditions and the materials shall be fully protected against UV light, excessive heat and contamination at all times.

The length of the liner shall be the length deemed necessary by the Contractor to effectively carry out the insertion of the liner and sealing of the liner at the outlet and inlet manholes. The required length of liner shall be verified in the field by the Contractor prior to fabrication of the liner.

(1) Liner Thickness: The Contractor shall submit liner thickness calculations to the Engineer for review. The CIPP shall be designed in accordance with the applicable provisions of ASTM F1216 and D2412 for "fully deteriorated gravity pipe conditions" and shall meet the following design conditions.

a. AASHTO H-20 Live Load with two trucks passing for CIPP in streets (16,000 lbs)

b. A soil modulus of elasticity of 1,000 psi, soil weight of 120 pounds per cubic foot and a coefficient of friction of Ku'=0.130r.

c. Short-term flexural modulus of 250,000 psi and long-term flexural modulus of 125,000 psi. Flexural strength of 4,500 psi.

d. Safety factor of 2.0 shall be used.

e. Groundwater elevation at the ground surface.

f. Pipe ovality of 2%.

g. Poisson's ratio of 0.3.

h. Enhancement factor (K) of 7.

i. Service temperature range shall be 40 to 140 degrees F.

j. Maximum long term deflection shall be 5 percent.

k. The installed, cured thickness shall be the largest thickness as determined by calculations for deflection, bending, buckling and minimum stiffness.

The minimum installed, cured liner thickness shall be as follows, regardless of what the calculations indicate as the required minimum thickness.

- 8" sewer: 6 mm up to 17 feet deep
  7.5 mm up to 25 feet deep

- 10" sewer: 6 mm up to 11 feet deep
  7.5 mm up to 18 feet deep
  9 mm up to 25 feet deep

- 12" sewer: 7.5 mm up to 12 feet deep
  9 mm up to 18 feet deep
  10.5 mm up to 25 feet deep

The installed thickness shall be measure as specified elsewhere herein. The Contractor shall submit his proposed plan for ensuring that the installed CIPP meets the above minimum thickness requirements. The plan shall include the proposed CIPP thickness to be installed (pre-installation thickness) and detailed inversion or pull-in procedures to reduce stretching and to reduce migration of resin.

I. Fiberglass Tube Saturated with Ultraviolet Light Curing Resin

The fiberglass tubing shall be seamless and spirally wound, including an innerfilm and outerfilm that protects and contains the resin used in the liner. The outerfilm will also serve as an ultraviolet blocking material.

a. The tube shall consist of a seamless, spirally wound fiberglass that is flexible and has strain values (expandable) of up to ten (10) percent. The tube will not have a longitudinal seam, including a stitched seam, stitch-free-weld or bond, or stitch-free overlap. The tube shall be constructed to withstand installation pressures and have sufficient strength to bridge missing pipe.

b. The impregnated tube shall have a thickness that when compressed at installation pressures and cured will meet or exceed the design thickness in accordance with ASTM F2019.

c. The tube shall be sized such that when installed, it will tightly fit the internal circumference and length of the original pipe. Allowance for longitudinal and circumferential expansion shall be taken into account when sizing and installing the liner. All dimensions shall be verified in the field by the Contractor prior to fabrication of the liner. Field measurements shall be used to ensure maximum closure between the new liner and the existing sewer pipe. There shall be no

leakage of groundwater between the existing pipe and the CIPP at the manhole connection or service lateral connections. Any leakage found shall be eliminated by the Contractor at no additional cost to the Owner.

d. The fiberglass tube shall be saturated with the appropriate resin using a resin bath to allow for the lowest possible amount of air entrapment. The liner will then be formed into a spirally wound shape for the purpose of being seamless in its cured state. An innerfilm and outerfilm material will be added that are both impervious to airborne styrene, with the outerfilm also having UV blocking characteristics. The inner membrane will be removed after the installation and curing processes are completed.

e. The wall color of the interior pipe surface of CIPP after installation shall be a light reflective color so that a clear, detailed examination with closed circuit television (CCTV) inspection equipment can be made.

f. Fiberglass materials must be "direct sized" to enhance the fiberglass/resin bond. Certification of this coating and its compatibility with the resin system used is required.

g. The liner shall be chemically resistant to trace amounts of gasoline and other oil products commonly found in municipal sewerage and soils adjacent to the sewer pipe to be lined.

g. The liner shall be constructed to withstand installation pressures and have sufficient strength to bridge missing pipe.

J. Substitutions and Product Options: This Section includes specific product names that are approved for installation on this Contract. Other manufacturer's or vendor's products not named will be considered as substitutions or "or equal" products if a written request for such is made in accordance with the General Conditions. The requests shall include complete data (including product literature, reference standards and third party performance and test data) substantiating compliance of the proposed substitution with the requirements stated in these Specifications. A list of product installations by the Contractor and proposed superintendent including quantities installed, dates of installation and references (name, address and phone numbers) shall be submitted. The Engineer's decision regarding evaluation and acceptance of substitutions shall be considered final and binding.

PART 3: EXECUTION

3.01 PREPARATION

A. All sewer mains and lateral to be lined must first be cleaned using high-velocity cleaning equipment. The interior of the pipe must be free of grit, grease, roots, protruding joint gaskets, debris, etc., to provide a suitable surface for the lining system. The cleaning of

the sewers to be lined shall be included in the cost of the work and no additional payment will be allowed.

B. The pipe to be lined must then be inspected by closed-circuit television inspection to assure it is suitable for lining.

3.02 INSPECTION

3.03 INSTALLATION/APPLICATION

A. Liner System

(1) The pipe lining system must be a "no-dig" technology. The only excavation allowed will be to replace specific pieces of the pipe, which currently are broken or sagging, and reconstruct the laterals. No process, which requires an insertion pit or damage to the manholes, will be considered. Deformed pipe or fold and form pipe line systems will not be considered.

B. Bypass Pumping:

(1) Bypass pumping of the wastewater in the sewer main to be lined shall be included in the bid and no additional payments will be allowed. See Specification Section 02760: MAINTENANCE OF SEWER FLOW.

C. Lining:

(1) The pipe liner shall be installed by an authorized installer in accordance with the manufacturer's installation instruction. The pipe shall be expanded and/or cured to fit tight inside the existing pipe with no annular space. Watertight seals shall be provided at the ends of the lining in each manhole and at lateral connections.

(2) The liner shall be cleanly and squarely cut inside the manhole, protruding no more than 2" inside the manhole wall, and no creating a ramp for solids and debris to collect to impede flow.

(3) Insignia End Seal by LMK Technologies at each sewer main entry point to manhole. Reference Detail 120.

D. Reinstating Laterals:

(1) Contractor is fully responsible at his own expense to repair to the satisfaction of the Owner/Engineer any overcutting of the liner or damage to the main or lateral that occurs during the reinstatement of the lateral.

3.04 FIELD QUALITY CONTROL

A. Testing:

(1) The liner shall be inspected and tested to the satisfaction of the Owner/Engineer.

(2) Air Testing: The Contractor shall test each section of sewer between manholes and all laterals (if any) to the limit of this contract using low pressure air. Testing shall not be performed until all backfilling has been completed. The Contractor may, at his option, test the section of sewer for his own purposes, prior to completion of backfilling; however, the requirements of this subsection shall not be deemed to be completed until the lines have been tested after the backfilling has been completed and trench settlement has been minimized. The costs of any testing incurred prior to authorization from the Engineer after backfilling has been completed shall be borne by the Contractor.

(3) A minimum of two minutes shall be provided at a pressure 0.5 psi above that calculated below to allow equilibrium of the air temperature with pipe wall, and then reduced to the calculated value before test readings shall commence. The rate of air loss shall be determined by measuring the time interval required for the average internal pressure to decrease by 1.0 psig or 0.5 psig.

(4) The initial test pressure to be developed in the sewer and laterals shall be determined as follows:

a. The internal pressure in psig shall be calculated as the sum of 3.5 plus the maximum depth of groundwater over the pipe in feet, divided by 2.3 between the crown of the sewer at the lower end and the groundwater elevation at the section of sewer to be tested. (For example, if the water height (depth) is determined to be 9.2 feet, the added pressure would be 4.0 psig. The initial test pressure in the sewer would then be 7.5 psig. The allowable drop would be to 6.5 psig within the time indicated elsewhere in this subsection.) If the groundwater level is 2 feet or more above the top of the pipe at the upstream end, or if the pressure required is more than 9.0 psi gage, the groundwater should be lowered by dewatering before the air test method is used.

b. In no case shall the test pressure in the sewers or laterals be greater than the maximum internal differential pressure recommended by the manufacturer of the pipe. Consult with pipe and related appurtenance manufacturers for maximum test pressure prior to testing. If maximum pressure is less than that calculated above, reduce groundwater by dewatering until calculated pressure does not exceed manufacturers' maximum.

c. Provide bracing as needed to prevent blow-out of plugs or caps.

(5) The pipe shall be considered acceptable if the air loss rate does not exceed 0.0015 cubic feet per minute per square foot of internal pipe surface when tested at the

initial pressure previously defined in this subsection. The time for the air pressure to decrease 0.5 psig shall not be less than the time indicated below:

	Time in Minutes: Seconds for the Pipe Test Section Length in Ft. (')								
Pipe Diameter (in.)	**100'**	**150'**	**200'**	**250'**	**300'**	**350'**	**400'**	**450'**	**500'**
4	3:46	3:46	3:46	3:46	3:46	3:46	3:46	3:46	3:46
6	5:40	5:40	5:40	5:40	5:40	5:40	5:42	6:24	7:07
8	7:34	7:34	7:34	7:34	7:36	8:52	10:08	11:24	12:40
10	9:26	9:26	9:26	9:53	11:52	13:51	15:49	17:48	19:45
12	11:20	11:20	11:24	14:15	17:05	19:56	22:47	25:38	28:38
15	14:10	14:10	17:48	22:15	26:42	31:09	35:36	40:04	44:31
18	17:00	19:13	25:38	32:03	38:27	44:52	51:16	57:41	64:03
21	19:50	26:10	34:54	43:37	52:21	61:00	69:48	78:31	87:11
24	22:47	34:11	45:34	56:58	68:22	79:46	91:10	102:33	114:03
27	28:51	43:16	57:41	72:07	86:32	100:57	115:22	129:48	144:20
30	35:37	53:25	71:13	89:02	106:50	124:38	142:26	160:15	177:53
33	43:05	64:38	86:10	107:43	129:16	150:43	172:21	193:53	215:34
36	51:17	76:55	102:34	128:12	153:50	179:29	205:07	230:46	256:33
Note: When length of test section falls between the lengths shown in the table heading, use the specified time for the longer of the two lengths.									

(6) If the above time for pressure drop leakage is exceeded, the Contractor shall, at its expense, determine source of leakage and make all necessary corrections and retest.

(7) The Contractor shall submit to the Engineer for approval the detailed test procedure and list of test equipment he proposes to use prior to testing.

B. Continuous with the liner being installed, a section of pipe shall be prepared under the same exact conditions as the liner inside the sewer. This section shall be cut apart from the permanent liner, after all final curing/installation is complete, without causing any damage to the permanent liner. It shall be sent to an independent third-party laboratory to be tested. A detailed report form shall be generated by the laboratory on their letterhead and shall include (as a minimum) the following:

(1) Sample description (where the sample was taken, date).

(2) Minimum wall thickness.

(3) Tensile Strength – ASTM D-638.

(4) Flexural Strength – ASTM D-790.

(5) Modules of Elasticity – ASTM D-790.

C. Acceptance: Observation of successful testing of manholes, sewers or force mains by the Engineer does not constitute acceptance of the system or any portion thereof. Upon completion of any determined portion of a total system and successful testing thereof, the Engineer may recommend final acceptance to the Owner. Only upon final inspection by the Owner or Engineer, and upon written acceptance for same, will the system or portion thereof be considered substantially completed. Upon such acceptance, the warranty period as specified for the manholes, sewers or force main will commence.

(1) If, during this final inspection, any irregularities are observed, the condition must be corrected at the Contractor's expense prior to acceptance. All repair methods shall be submitted to the Engineer for review and approval prior to repair work being performed.

END OF SECTION 02650

SECTION 02700
PRECAST CONCRETE MANHOLES

PART 1: GENERAL

1.01 DESCRIPTION

A. This section covers standard and drop sewer manholes. Refer to Detail No.101 for direction on when specific manhole types are required and for additional requirements. Manholes shall be constructed complete with covers, steps, fittings and other appurtenances specified herein and in accordance with Detail Nos. 102 through 107, 115, 116 and 117.

B. See Manhole Table at the end of Specification Section 02750 for additional information.

1.02 RELATED SECTIONS

A. Section 02200 – Excavation, Backfill & Compaction
B. Section 02750 – Manhole Rehabilitation
C. Section 03300 – Concrete & Grouts

1.03 SUBMITTALS

A. Submit shop drawings of typical manufactured wall sections and bases proposed for this project, including joint design and related details for field assembly. Include Certification of Conformance with Contact Documents and the appropriate ASTM Specification.

B. Submit detailed shop drawings of each new manhole to be provided under the Contract. For doghouse manholes, Contractor shall verify all existing conditions and include these in submittal.

C. Submit shop drawings of typical cast iron frames and covers proposed for this project.

D. Anti-Flotation Design: Structure shall be designed by a registered professional engineer.

(1) Design shall include anti-flotation collar to withstand flotation under full hydrostatic head with a 1.25 factor of safety for all manholes.

a. 4-Foot Inner Diameter: Flotation collar shall be a minimum of 4-inches.

E. Make submittals prior to start of construction. Make submittals to Engineer.

F. The Contractor shall submit to the Engineer shop drawings showing details of construction for each manhole including: dimensions for each manhole and manhole section, step locations, reinforcing size, spacing and location, joint construction and details, invert channels and benching details, waterproofing, pipe connection details, concrete mix and design strength, wall thickness, H-20 wheel load confirmations, etc.

1.04 REFERENCE SPECIFICATIONS, CODES AND STANDARDS

ASTM A-536	Ductile Iron Castings
ASTM C-90	Hollow Load Bearing Concrete Masonry Units
ASTM C-144	Aggregate for Masonry Mortary
ASTM C-150	Portland Cement
ASTM C-207	Hydrated Lime for Masonry Purposes
ASTM C-478	Precast Reinforced Concrete Manhole Sections

1.05 QUALITY ASSURANCE

A. **Manufacturer's Qualifications:** All precast concrete manholes shall be furnished by manufacturers who are fully experienced, reputable and qualified in the manufacture of the material to be furnished. The manholes shall be designed, constructed and installed in accordance with the best practices and methods and shall comply with these Specifications.

The precast manufacturer shall have a recognized Quality Improvement Process installed at the manufacturing facility. Concrete compressive strength testing shall be performed in a laboratory inspected by the CCRL of the National Bureau of Standards or approved MDSHA laboratory. Testing shall be performed by the Grade I ACI Certified Laboratory Technicians or by Level I PCI Certified Technicians.

B. Precast reinforced concrete wall sections and bases for manholes shall be manufactured in a plant approved by the Engineer and the Maryland Department of Transportation (DOT) for manufacture of concrete pipe.

C. Aggregate used in producing concrete shall be from Maryland DOT-approved sources.

D. Completed manholes shall be watertight.

PART 2: PRODUCTS

2.01 MATERIALS

A. **PRODUCT REQUIREMENTS**: All new manholes shall be precast concrete manholes except in special circumstances as approved by the Engineer. All precast concrete manholes shall conform to Detail Nos. 101 through 109, 115 through 117 and to ASTM C-478. The following minimum standards also apply.

(1) Wall Thickness shall be 1/12 of the inside diameter with a minimum thickness of 5 inches.

(2) Concrete shall be in accordance with ASTM C478, C890, C891 and C923. Compressive strength to be minimum 4,000 psi at 28 days. Air content to be a maximum of 4%. Air entraining admixtures shall be in accordance with ASTM C260. Chemical admixtures shall be in accordance with ASTM C494 and shall not contain any calcium chloride. Refer to Section 03300 for additional requirements.

(3) Aggregate shall be sound, crushed, angular granite stone only, substantially in accordance with ASTM C-33, except that the requirement for gradation in that standard shall not apply. Smooth or rounded stone (river rock) shall not be acceptable.

(4) Cement shall be Type II with a maximum tricalcium aluminate content of 8%. In lieu of Type II cement and granite aggregate, Type III cement with calcareous (limestone) aggregate may be used. The manhole manufacturer shall submit lab tests certifying the amount of Alkalinity (minimum 78%) present in the concrete mix. Cement shall be minimum 564 pounds per cubic yard.

(5) Steel reinforcement shall be in accordance with ASTM A615 Grade 60 deformed bar, ASTM A82 or ASTM A185 welded wire fabric (WWF).

(6) Base sections shall include the bottom slab and the first wall section to include the factory-formed pipe openings. The base sections shall be cast monolithically unless otherwise approved by the Engineer and shall be circular with uniform outside diameter. The thickness of the bottom slab shall be not less than that of the manhole riser sections or top slab or 6 inches, whichever is great.

(7) Riser sections shall be circular with uniform outside diameter. Riser sections/joints shall be limited to the maximum extent possible.

(8) Cone sections shall be eccentric with the inside face of one side vertical and flush with the inside face of the barrel section - same wall thickness as the base and riser sections.

(9) Joints between sections shall be tongue and groove joints manufactured in accordance with ASTM C-443. Joints may be sealed with rubber gaskets in accordance with ASTM C-443 or with two pieces of butyl rubber sealant conforming to Federal Specification SS-S-210A and AASHTO M-198, Type B. The cross-sectional area of the butyl rubber sealant shall be no less than the annular space times the height of the joint.

(10) Below grade exterior joints shall be sealed externally with minimum 6-inch-wide, 1/8-inch-thick butyl rubber sealant.

(11) All above grade exterior joints and all interior joints shall be sealed with an approved non-shrink grout.

(12) All markings required by ASTM C-478 shall be clearly stamped on the inside of each section.

(13) Manhole riser sections, flat top slabs and cone sections shall be designed for H-20 loadings per ASTM 890.

(14) Manhole benching and invert channels shall be precast by the manhole manufacturer. Formed and poured in place benches and inverts may be approved in certain situations by the Engineer and shall be used where specifically required such as for doghouse manhole. Precast inverts shall be constructed using minimum 4,000 psi concrete as specified for the manhole sections above. Poured-in-place benching and invert channels shall be minimum 4,000 psi with fiber reinforcing. Full-pipe invert channels shall be provided for all manholes per Detail No. 115.

The Contractor shall be responsible for determining exact invert elevations and furnishing the information to the manhole manufacturer prior to the manufacture of the manhole and precast bench and invert. All benching and invert channels shall conform to Detail No. 115 and 117.

(15) Lifting device shall be ASTM steel strand. Lifting loops made from deformed bars are not acceptable.

Lifting holes may be on the inside or outside faces of the walls to facilitate handling. The depth of the lifting holes shall not be deeper than the wall thickness minus 2 inches. Lifting holes that penetrate through the wall are not acceptable. Lifting holes shall be filled with non-shrink grout.

(16) The manhole manufacturer shall furnish the Engineer with test results on compressive strength and absorption for one section in every fifteen sections poured, and certification from cement manufacturer and aggregate supplier certifying chemical content. The Engineer reserves the right to pick random samples for testing. The manufacturing facility shall be made available for the Engineer at all times for inspections.

(17) Pipe Connections to Manholes: Pipes shall be connected to new manholes via flexible rubber boot connectors/seals. Where required and/or necessary and where approved by the Engineer, cored holes may be used. For cored holes, fill all voids with non-shrink grout and pour a concrete collar outside of the manhole per Detail No. 116. Refer to Detail No. 115 for bench and invert requirements. Pipe shall be pushed to the designed stop and no further.

Flexible rubber boot connectors shall conform to ASTM C-923 and shall be A-Lok or Contour Seal. Rubber boots shall be integrally cast into the base section or installed in cored openings with stainless steel compression bands. Openings around the rubber boot connectors shall be filled with non-shrink grout.

The locations of the pipe openings shall vary from the locations shown on the

Drawings by no more than ½-inch vertically and 5 degrees horizontally. Pipe openings shall provide clearance for pipe projecting a minimum of 2 inches inside the manhole.

(18) Manhole steps shall be copolymer polypropylene plastic and shall be in accordance with ASTM C-478 and current OSHA regulations. Steps shall be driven into tapered holes in precast manhole sections, not grouted into the walls. Testing requirements to be as specified in ASTM C-478 plus each step shall be tested to resist a 1,000 lb pullout. The manhole manufacturer shall furnish certification of each test with each shipment showing manhole location, date of test and results.

(19) Manhole Frames and Covers: Manhole frames and covers shall be as specified and shown in Detail Nos. 104 through 107. Manhole covers on private sewer systems shall be the same as shown in the Details.

Alternate frames and covers for certain applications may be considered. Use of alternate frames and covers must be approved by the Engineer. Any change from the frames and covers specified in this Manual must be approved by the Engineer in writing prior to the beginning of construction.

This specification addresses the traffic rated frames and covers shown in Standard Details 104 and 105 only.

Frames and covers shall be ASTM A48 Class 35 gray iron per Section 3.1 of AASHTO M306. Frames and covers shall be of uniform quality, free from sand holes, gas holes, shrinkage, cracks and other surface defects. Castings shall be ground smooth and well cleaned by shot blasting. Bearing surfaces shall be cast or machined with such precision to prevent rocking.

Frames and covers shall be rated for traffic loading and shall have first article proof load tests conducted in accordance with AASHTO M306, Section 7, Proof Load Testing. The results of these tests shall be made available to the Engineer upon request. The casting shall be tested on a suitable load testing machine and the casting shall hold a 40,000 pound load for one minute without experiencing any cracks or detrimental permanent deformation.

Each frame and cover shall be clearly marked to show, at a minimum, the name of the producing foundry, country of manufacture, ASTM material designation, individual part number and cast or heat date. Covers shall also be lettered per Standard Detail No. 104.

If corrosion protection of the manhole is specified, the frame and cover shall be protected from corrosion by sandblasting and coating the entire frame and cover at the factory with coal tar epoxy, Koppers 300M or equal, 2 coats at minimum 8-mil dry film thickness each. Any damage to the coating shall be repaired in the field in a manner approved by the Engineer. If the frame and cover are not coated at the factory, all field-applied coating must be applied to the Engineer's approval.

(a) Frames: Refer to Standard Detail No. 105. All frames shall be equipped to accept a cam-lock cover. Frames may be (1) standard height or low profile for use with cone sections and flat top sections below grade or (2) slab-type for all above grade flat top sections. Frames shall be as manufactured by East Jordan Iron Works or approved equal. See Standard Detail No. 105 for approved model numbers.

(b) Covers: Refer to Standard Detail No. 104. All covers shall have a neoprene O-ring or T-gasket permanently installed in a machined groove under the lid. Side or wiper gaskets are not approved.

Watertight covers shall have two 5/8" stainless steel pentagon head bolts and brass cam lock devices to engage the locking ramps on the frame and provide the watertight seal.

As the standard, the opening device on covers shall be two non-penetrating pickholes.

Covers are to have a nominal opening diameter of 24 inches. Larger openings/covers may be specified by the Engineer for specific installations and/or for large diameter sewers.

Covers may be solid or vented (two 1" holes in cover). Covers shall be as manufactured by East Jordan Iron Works or approved equal. See Standard Detail No. 104 for approved model numbers.

Alternate frames and covers to those specified and shown in Standard Detail Nos. 104 and 105 must be approved by the Engineer. A sample of the alternate frame and cover must be delivered to Engineer as part of the review and approval process.

(20) Manhole Adjustment: Manholes shall be ordered such that minimum grade adjustments will be required to achieve the final rim elevation. The manhole base, riser and cone heights shall stack out the manhole as close as possible to the final rim elevation. The maximum allowable height adjustment shall be six inches unless approved otherwise. Adjustments may be made with concrete grade rings and/or a maximum of one course of brick.as specified below. The Contractor shall submit detailed shop drawings for each manhole showing all dimensions and elevations. The Contractor shall identify any required height adjustments on the shop drawings. Adjustments must be approved by the Engineer prior to manufacturing the manholes.

Bricks used for adjusting cover elevations shall meet the requirements of ASTM C32 Grade MS and shall have minimum dimensions of 2 ¼-inches by 3 ½-inches by 7 ½-inches. Brick shall be new, solid, sound, hard-burned throughout and uniform in size and quality. Bricks shall be set in a bed of non-shrink grout, minimum 1 inch thick. The outside of all bricks shall also be coated with minimum

1 inch thick non-shrink grout. The exterior grout shall overlap the cone section at least 6 inches and shall extend to above the frame flange to provide a complete exterior coating. Refer to Standard Detail No. 106.

Precast concrete grade rings for setting cast iron frames over manholes shall be circular, 2 inches thick minimum, and have on No. 2 continuous reinforcing steel bar and shall be manufactured in accordance with ASTM C478. Leveling rings shall be set in a bed of non-shrink grout, minimum 1 inch thick. The outside of all rings shall also be coated with minimum 1 inch thick non-shrink grout. The exterior grout shall overlap the cone section at least 6 inches and shall extend to above the frame flange to provide a complete exterior coating. Refer to Standard Detail No. 106.

(21) Non-shrink grout shall be Quikrete Commercial Grade Non-Shrink Grout, Master Builders "Masterflow 713 Grout" or "Set-Grout", Sauereisen Cements "F-100 Level Fill Grout", U.S. Grout "Five Star Grout" or approved equal.

(22) Epoxy grout shall be a two-component, solvent free, moisture insensitive, high modulus, high strength, Type I and II, Grade 3, Class B and C, Epoxy Resin Adhesive meeting the requirements of ASTM C-881.

(23) Manhole Pressure Restraints: Manholes with watertight covers are subject to internal water pressure which could unseat the tops. Therefore, the tops shall be anchored to the first barrel section (which must be at least 5 feet long) with three anchor bars spaced 120 degrees around the manholes unless otherwise approved by the Engineer. The anchor bars shall be 3/8-inch x 3-inch x 24 inches long stainless steel with a 7/8-inch hole 1-1/2 inches from each end. Each bar shall be anchored to the outside of the barrel and top slab with ¾-inch x 6-inch long stainless steel adhesive anchor bolts. Refer to Standard Detail No. 107 for additional requirements.

(24) Corrosion Protection: The Engineer will specify specific manholes to be protected against hydrogen sulfide corrosion. The manholes will be in high corrosion areas, where the potential for corrosion exists or is predicted for the future and at the discharge of force mains into the gravity sewer.

The corrosion protection shall be accomplished by spray coating the manhole walls and benches with epoxy. The material must be approved by the Engineer.

The specialized cementitious mortar product shall be High Performance by Strong Seal Systems, Aluminaliner by Quadex, Sewpercoat PG by LaFarge Calcium Aluminates, Permacast MS-10,000 with Conshield or CR-5000 by Action Products Marketing Corp. The mortar shall be spray-applied to a minimum thickness of 1-inch and troweled smooth after application. For this option, the invert channels and other exposed surfaces shall be coated with Koppers 300M coal tar epoxy or equal, 2 coats at 8 mil dry film thickness each.

As an alternate, the manhole walls, benches and inverts can be coated with a specialized spray-applied polyurethane coating (Spray Roq or equal). The Engineer will specify the required thickness.

PART 3: EXECUTION

3.01 INSPECTION

A. The quality of all materials, the process of manufacture and the finished products shall be subject to inspection and approval by the Engineer. Such inspection may be made at the place of manufacture, or at the site after delivery, or at both places, and the products shall be subject to rejection at any time on account of failure to meet any of the Specification requirements, even though sample sections may have been accepted as satisfactory. Products rejected after delivery to the job shall be marked for identification and shall be removed from the job at once. All products which have been damaged after delivery will be rejected, and if already installed, shall be repaired or removed and replaced, as directed by the Engineer, and at no additional cost to the Owner.

At the time of inspection, the products will be carefully examined for compliance with the ASTM designation specified herein and these Specifications, and with the approved manufacturer's shop drawings. All projects shall be inspected for general appearance, dimension, honeycomb, blisters, cracks, roughness, soundness, etc. The surfaces shall be dense and close-textured.

Imperfections in the concrete may be repaired, subject to the approval of the Engineer, after demonstration by the manufacturer that strong and permanent repairs result. Repairs shall be carefully inspected before final approval. Cement mortar used for repairs shall have a minimum compressive strength of 4,000 psi at the end of seven days and 5,000 psi at the end of 28 days, when tested in 3-inch by 6-inch cylinders stored in the standard manner. Epoxy mortar may be utilized for repairs subject to the approval of the Engineer. Repair material must be approved by the Engineer. A minimum of three coats of mortar material shall be applied for all repair work.

The Contractor shall furnish in duplicate to the Engineer, prior to each shipment of manholes unless otherwise approved by the Engineer, manufacturer's certification and certified test reports that the manholes were manufactured and tested in accordance with the ASTM Standards specified herein.

All precast manholes shall be permanently marked with the following information:

(1) Manufacturer, date;
(2) Manhole diameter, manhole number, where appropriate;
(3) Standard produced to (ASTM, etc).

3.02 INSTALLATION/APPLICATION

A. **INSTALLING PRECAST MANHOLES:** Manholes and other precast structures shall be constructed to the dimensions as shown on the Drawings and as specified in these Specifications. Excavation, bedding and backfilling shall be as specified in Section 02200.

Manhole bases shall be placed on a foundation mat at least 12 inches of compacted No. 57 crushed stone (6 inches when placing bedding on solid rock that extends to a minimum of 2 feet beyond the outside diameter of the base). The surface of the bedding material shall be carefully graded and the base section accurately set so the connecting pipes will be on proper line and grade. The elevation of the bedding shall be adjusted as required until proper grade and alignment of the base section has been attained. Precast concrete bases and barrel sections shall be set so as to be vertical and with sections in alignment. No wedging or blocking under precast bases shall be allowed.

Precast bases shall have properly sized and oriented pipe openings. The connecting pipes shall be carefully adjusted to the proper line and grade, and the pipe bedding shall be compacted under the pipe completely for support during installation of the manhole.

The joints of precast barrel sections shall be sealed with preformed flexible joint butyl sealant used in sufficient quantity to completely fill the joint cavity (minimum 2 pieces per joint as shown in the Details) or O-rings. The inside of each joint and the outside of above-grade joints shall be filled with a non-shrink grout resistant to hydrogen sulfide and finished flush with the adjoining surfaces. The outside of below grade joints shall be sealed with a 6-inch wide, 1/8-inch thick exterior butyl rubber seal strip as shown on the Details. Allow completed joints to set for 24 hours before backfilling, unless approved to be backfilled earlier by the Engineer. Backfilling shall be done in a careful manner, bringing the fill up evenly on all sides, as specified in Section 02200. The Contractor shall install the precast sections in a manner that will result in watertight joints.

Holes in the concrete required for handling or other purposes shall be plugged with a non-shrinking grout.

Where additional holes may be cut in the precast sections to accommodate pipes, cutting shall be done prior to setting them in place to prevent any subsequent jarring which may weaken the joints. Any such cutting shall be performed with appropriate sized concrete coring machines. Epoxy mortar or non-shrink grout shall be used to form smooth openings where rubber connectors are used.

Manhole frames and covers shall be installed as specified and shown in Standard Detail Nos. 104 and 105. All frames shall be bolted to cones as shown unless otherwise approved by the Engineer/Owner.

<u>Interior coatings for corrosion protection</u> shall be installed where specified. All internal coatings shall be applied in strict accordance with the manufacturer's recommendations. The Contractor shall first clean each sewer manhole to be surfaced and shall dispose of

any resulting material. The cleaning shall be performed using a high power jet wash at a minimum of 3500 psi water pressure to remove all dust, biological growths, grease, oil, paint or any other surface contaminants or coatings. Coatings that cannot be removed shall be sand-blasted to ensure adequate bonding of the coating. The walls and benches shall be coated monolithically to the required thickness by spray-on methods. Cementitious coatings shall be minimum 1" thick and shall be troweled smooth after application. If epoxy is installed, the coating shall be at least 80 mils thick. The invert channel and any other exposed surface not protected from corrosion shall be coated with Koppers 300M coal tar epoxy or approved equal, 2 coats, minimum 8 mil dry film thickness each.

Install stainless steel pressure restraints across manhole sections where specified and as shown in Detail Nos. 102, 103 and 107. Pressure restraints are required for all flat-top manholes with watertight covers unless otherwise approved by the Engineer.

It shall be the Contractor's responsibility to protect the structure against flotation regardless of elevation of the groundwater table, until structure excavation or backfill is completed.

Concrete benching and invert channels shall be installed and/or finished to meet the requirements shown in Detail No. 115.

When installation is not in progress, or the potential exists for dirt or debris to enter the manhole, the manhole shall be covered with wood or other protection. At no time shall surface water or ground water be allowed to enter manholes during construction.

3.03 FIELD QUALITY CONTROL

A. **DELIVERY, STORAGE AND HANDLING:** Care shall be taken in loading, transporting and unloading to prevent injury to the manholes. Under no circumstances shall the manholes be dropped. Hooks shall not be allowed to come in contact with the joints. Materials, if stored, shall be kept safe from damage.

Precast concrete sections shall not be delivered to the job until representative concrete control cylinders have attained a strength of at least 80% of the specified minimum.

B. **ACCEPTANCE TESTS:** All manholes shall be tested via vacuum testing per ASTM C-1244, except that the minimum test times shall be as defined in the Table 1 (test times modified from those in ASTM C-1244). Vacuum testing shall not be performed until the manhole is completely finished, including applying any protective coating where specified. Manholes shall be thoroughly cleaned of all silt, debris and foreign matter of any kind prior to the vacuum testing and then again prior to final inspection as required.

The vacuum test unit shall be placed at the top of the manhole structure to include the frame/cone interface/seal in the test. A plate test unit will likely be required to perform the test. Bladder units can be used as long as the bladder does not cover the interface of the frame and the cone section.

Vacuum tests shall be performed by placing the testing unit at the top of the manhole in accordance with the manufacturer's recommendations. A vacuum of 10 inches of mercury shall be drawn on the manhole, the valve on the vacuum line of the test unit closed, and the vacuum pump shut off. The time shall be measured for the vacuum to drop to 9 inches of mercury. The manhole shall pass, if the time for the vacuum reading to drop from 10 inches of mercury to 9 inches of mercury meets or exceeds the test times indicated in Table 1 below. The test times in Table 1 are modified from those in ASTM C-1244. Table 1 shall be included on the Contractor's test reports. Refer to ASTM C-1244 for further requirements.

Any leaks found during the vacuum testing shall be repaired by the Contractor in a manner approved by the Engineer. If a waterproofing compound is approved by the Engineer to repair leaks (such as Thoroseal or approved equal), a minimum of three (3) coats shall be applied in accordance with the manufacturer's recommendations and as approved by the Engineer/Owner. The manhole shall be vacuum tested again after such repairs are made, until the manhole passes the vacuum test at no additional cost to the Owner.

TABLE 1: MINIMUM VACUUM TEST TIMES FOR VARIOUS MANHOLE DIAMETERS

Manhole Depth (feet)	Manhole Diameter (inches)								
	36	42	48	54	60	66	72	84	96
	Test Time (seconds)								
8	60	60	60	60	60	60	66	72	78
10	60	60	60	60	66	72	82	98	114
12	60	60	60	70	78	86	98	118	138
14	60	60	70	82	92	102	114	136	158
16	60	68	80	92	104	116	134	160	188
18	64	76	90	104	118	130	146	178	208
20	70	84	100	116	130	144	162	194	226
22	78	92	110	128	144	158	178	212	246
24	84	102	118	140	156	174	194	232	270
26	92	110	128	150	170	188	210	250	290
28	98	118	138	162	182	202	226	270	314
30	106	126	148	174	196	216	242	288	334

Cementitious Coating for Corrosion Protection: Whenever a cementitious mortar coating is applied for corrosion control, samples shall be taken of the installed liner each day that cementitious lining is installed with at least one test for every five manholes coated that day. Samples shall be cube samples. At least six cubes shall be taken for each sample for testing. The samples shall be tested in accordance with the applicable ASTM standards to verify that the installed liner meets the compressive strength requirements

specified herein and the lining manufacturer's published data on the product. Tests shall include 7 day and 28 day strength tests (3 tests/cubes for each time period for each sample). Shrinkage and bond strength tests shall be performed on each batch or lot of material shipped to the Contractor as directed by the Engineer. The tests shall be performed by an independent testing laboratory. All costs associated with the tests shall be paid for by the Contractor. The test results shall be submitted to the Engineer immediately when available, no later than 30 days after the coating is installed.

3.04 REPAIRS TO NEW PRECAST CONCRETE MANHOLES

There shall be no groundwater infiltration or other leakage (active or evidence of being previously active) through the manhole walls, benches, inverts or pipe connections at the manholes. If leakage is found, it shall be eliminated with an appropriate non-shrink cement mortar, grout or sealant as recommended by the manufacturer and approved by the Engineer at no additional cost to the Owner. Injection grouting (Avanti-AV-202 Multigrout or approved equal) may be required to stop leaks around the pipe connections or in the invert channel or benches. Grout material must be submitted to and approved by the Engineer. If a waterproofing compound is approved by the Engineer to repair leaks (such as Thoroseal or approved equal), a minimum of three (3) coats shall be applied in accordance with the manufacturer's recommendations. The Engineer's decision on how defective manholes are repaired shall be final. If any defective manholes are discovered after they have been installed or during the warranty period, they shall be repaired or replaced in a satisfactory manner at no additional cost to the Owner. Repaired manholes, including those repaired during the warranty period, shall be vacuum tested again at no additional cost to the Owner.

END OF SECTION 02700

SECTION 02750
MANHOLE REHABILITATION

PART 1: GENERAL

1.01 DESCRIPTION

This specification includes all work, materials and equipment required for the structural or corrosion rehabilitation of wastewater structures utilizing epoxy based resin technology. The purpose is to eliminate infiltration, repair voids, restore structural integrity and provide corrosion protection by the application of a spray applied monolithic manhole liner to the wall, bench and invert surfaces of brick/concrete structures or structures produced with any other masonry construction material.

The Table provided at the end of this Section provides additional detail on Project Manhole Requirements.

1.02 RELATED SECTIONS

A. Section 02040 – Maintenance of Traffic
B. Section 02650 – Cured-In-Place Pipe Lining (CIPP)
C. Section 02760 – Maintenance of Sewer Flow
D. Section 02765 – Television Inspection
E. Section 02767 – Sewer Line Cleaning

1.03 SUBMITTALS

A. Shop drawings for all proposed materials.
B. Certification documentation of Installer Qualifications.
C. Third party verification of product physical requirements.
D. Installation instructions from the Manufacturer.
E. Recommendations on methods to rehabilitate or seal to manholes previously lined.
F. Copy of all structural lining design calculations. The calculation shall include a calculated weight of product to be applied to achieve the required mil thickness.
G. Contractor shall submit a copy of the Draft Field Log that provides sufficient information to verify that required application rates were met or exceeded during installation. The Log will be submitted, reviewed and approved prior to any payment being approved for these manholes.
H. Detailed Schedule.
I. Bypass Pumping Plan to isolate each manhole.
J. Traffic Control Plan around each specific manhole.

1.04 REFERENCE SPECIFICATIONS, CODES AND STANDARDS

A. ASTM D638: Test Method for Tensile Properties of Plastics.

B. ASTM D790: Test Methods for Flexural Properties of Unreinforced and Reinforced Plastics.

C. ASTM D695: Test Methods for Compressive Properties for Plastics.

D. ASTM D4060: Test Methods for Abrasion.

E. ASTM D2240: Test Method for Hardness, Shore D.

F. ASTM D4541: Adhesion to Concrete.

G. ASTM D2990: Test Methods for Tensile, Compressive and Flexural Creep and Creep Rupture in Plastics.

H. ASTM D543: Resistance of Plastics to Chemical Reagents.

I. ASTM C109: Compressive Strength of Hydraulic Cement Mortars.

J. ASTM C307: Tensile Strength of Hydraulic Cement Mortars.

1.05 QUALITY ASSURANCE

A. Manufacturer's Qualifications

(1) Furnish materials of quality required by the American Society for Testing and Materials (ASTM) standards or other approved standards and specifications.

(2) Provide guarantee against defective materials and workmanship in accordance with the requirements of these specifications.

(3) The manufacturer shall provide written certification that the Applicator has been trained and certified by the manufacturer to handle and apply their products, as well as appropriate re-certification documentation, as necessary, by the manufacturer.

B. Installer's Qualifications

(1) Applicator shall initiate and enforce quality control procedures consistent with applicable ASTM, NACE and SSPC standards and the manufacturer's recommendation.

(2) Materials are to be kept dry, protected from weather and stored under cover.

(3) Resin materials are not to be stored below 50 degrees F. Care should be taken to not store near open flame, heat or strong oxidants.

(4) Resin materials are to be handled according to their material safety data sheets.

(5) Applicator shall conform to all local, state and federal regulations including those set forth by OSHA, RCRA and the EPA and any other applicable authorities. Traffic control, confined space entry, and work site protection shall be the responsibility of the Contractor and incidental to the project. The Contractor must make any necessary notifications to appropriate agencies regarding any road closures or major disruption to traffic flow.
Any access to work areas shall be the Contractor's responsibility. Should any fencing, guiderail or other appurtenances need temporarily dismantled, Contractor shall immediately replace these items upon completion of work in the applicable area.

(6) The containment of sewage and site cleanliness is the responsibility of the Contractor. Fines levied by State and Federal agencies in the event of a spill or unapproved discharge shall be paid by the Contractor. Spill cleanup as well as site cleanup shall be conducted by and paid for by the Contractor. All cleanup and costs are part of acceptance of the project, without which, final payment will not be made.

(7) Installer shall be able to demonstrate they have been certified to install the approved system for a minimum of three (3) years and have rehabilitated a minimum of 2000 manhole structures.

1.06 WARRANTY

A. Contractor shall provide a minimum three (3) year warranty against defects in materials and workmanship. Contractor shall, within reasonable time after receipt of written notice thereof, repair defects in materials or workmanship which may develop during said three (3) year period, and any damage to other work caused by such defects or the repairing of same, at his own expense and without cost to Owner.

PART 2: PRODUCTS

2.01 MATERIALS

A. **Patching and profiling mix**: A quick setting cementitious material shall be used as a patching and profiling mix. It shall be mixed and applied according to the manufacturer's recommendations and shall meet the following minimum requirements.

(1)	Compressive strength	ASTM C 109	1000 psi @ 1 hr 3500 psi @ 48 hrs 5000 psi @ 28 days
(2)	Tensile strength	ASTM C 307	200 psi @ 24 hrs 300 psi @ 7 days

B. **Infiltration control mix**: A rapid-setting cementitious product specifically formulated for leak control shall be used to stop minor water infiltration, shall be mixed and applied according to the manufacturer's recommendations and shall meet the following minimum requirements.

(1)	Compressive strength	ASTM C 109	1,800 psi @ ½ hr 4,000 psi @ 24 hrs 5,000 psi @ 7 days

(2) Manufacturers/Products

a. Quadex Quad – Plug
b. Approved Equal

C. **Grouting mix**:

(1) A polyurethane grout shall be used for stopping very active infiltration, filling voids and shall be mixed /applied according to manufacturer's recommendations.

(2) Approved Manufacturers/Products

a. Deneef Hydroactive Cut
b. Sealguard II
c. Approved Equal

D. **Resin Based Liner**:

(1) The resin based material shall be used to form the sprayed structurally enhanced monolithic liner covering all interior surfaces of the structure, including benches and inverts of manholes.

(2) The finished liner shall be:

a. SprayWall®, as manufactured by Sprayroq, Inc., or

b. Approved Equal must conform to the minimum physical requirements listed below. The physical requirements must be verified by an independent, certified, third party testing laboratory.

The following are minimum physical requirements:

Parameter	**Design Requirement**
Compressive strength	ASTM D 695 > 7,500 psi
Tensile strength	ASTM D 638 > 7,200 psi
Flexural strength	ASTM D 790 > 12,000 psi
Bond	Shall exceed tensile strength of substrate
Flexural modulus (initial)	ASTM D 790 > 600,000 psi
Long Term Flexural Modulus	ASTM D2990 > 500,000 psi
Density	87 ± pcf
Tensile Modulus	ASTM 638 >400,000 psi

The finished structure shall be corrosion resistant to: Hydrogen Sulfide; 20% Sulfuric Acid; 17% Nitric Acid; 5% Sodium Hydroxide as well as other common ingredients of the sanitary sewage environment.

(3) For manholes designated to receive structural manhole lining, the required thickness of the lining shall be calculated in accordance with the design methodology in ASTM F1216 using the following design conditions:

a. Fully deteriorated gravity pipe condition.
b. Groundwater elevation is one half the height of the manhole.
c. Safety factor = 2.0.

The minimum coating thickness for structural rehabilitation shall be 250 mil.

The initial flexural modulus of elasticity (short term) of the submitted resin material will be utilized with the long term deformation percentage as determined by ASTM D2990 (see below). The value of the long term flexural modulus of the proposed product will be certified by an independent, certified, third party testing lab, independent of the Manufacturer and submitted with the bid package.

The definition of long term value will be identified as initial flexural modulus of elasticity less the reduction in value caused by *Creep over a fifty (50) year minimum period* and *verified by third party testing (ASTM D2990).*] All design submittals will include this certified third party testing (ASTM D2990) value in their respective design calculations.

(4) When groundwater loading is not an issue and only a corrosion barrier is required, the rehabilitation lining shall be installed to the thickness necessary to qualify as a monolithic (void free) liner. The roughness of the substrate will dictate the thickness needed to create the monolithic liner and eliminate any opportunity for voids in the lining. The minimum value for coating thickness for corrosion protection for non-structural rehabilitation shall be 150 mils.

PART 3: EXECUTION

3.01 PREPARATION

A. All pipe work between two manholes must be completed before those manholes are rehabilitated.

B. All required interruptions of flow through manholes, wet wells, pump stations or any other portion of the sanitary sewer system shall be coordinated with and approved by the Owner or Engineer before work can commence. This will be accomplished by submitting a complete bypassing flow plan to the Owner/Engineer before said work commences in accordance with Section 02760 – Maintenance of Sewer Flow.

C. Place screens over all pipe openings to prevent extraneous material from entering the sewer system.

D. All foreign material shall be removed from the structures' wall and bench/floor using a pressure water spray (minimum 3000 psi). The use of acid for cleaning purposes, no matter how dilute, will not be allowed. Loose or protruding brick, mortar and concrete shall be removed by using a mason's hammer and chisel. Fill any large voids with quick setting patch mix as described in Paragraph (2.01 A). The surface to be repaired must be clean and free of any loose materials.

E. Minor leaks shall be stopped using the quick-setting specially formulated infiltration control mix (paragraph 2.01 B) and shall be mixed and applied per manufacturer's recommendations. When severe infiltration is present, drilling may be required in order to pressure grout outside the structure using either a cementitious or chemical grout (paragraph 2.01 C). Manufacturer's recommendations shall be followed when pressure grouting is required.

F. Tape off all manhole steps with masking tape to prevent them from getting sprayed. Remove all masking tape from manholes after spraying is complete.

3.02 INSPECTION

Evaluation of Atmosphere: Prior to entering structures, an evaluation of the atmosphere will be conducted to determine the presence of toxic, flammable vapors or possible lack of oxygen. The evaluation shall be in accordance with local, state or federal safety

regulations. Appropriate confined space procedures and equipment will be used while accessing the structure.

3.03 INSTALLATION/APPLICATION

A. Application Temperatures: No application of liner shall be made unless the ambient temperature inside the structure is 50° F or higher or as recommended in writing from the manufacturer.

B. Bench/Invert Rehabilitation:

(1) The manhole bench and invert shall always be rehabilitated. The Contractor needs to insure that a monolithic system is achieved. Before rehabilitation, and after proper cleaning, the substrate must be dried. This is to insure maximum adhesion of the lining to the substrate. This drying is accomplished by the use of a heated, forced air blower. The drying shall be to the specification dictated by the resin manufacturer and its trained applicator.

(2) After blocking or bypassing the flow through the structure and thorough cleaning/preparatory work has been achieved, the sprayed liner shall be applied to the invert, bench and wall areas with the same monolithic material and in the same manner as specified for the liner application below. The spray shall be applied such that the entire structure receives a structurally enhanced monolithic liner. The invert, bench and floor liner thickness shall be the same as that required at the bottom of the structure walls. If an additional application is required to meet structural rehabilitation levels, the initial application must be allowed to fully cure before applying the second coat. This is to protect the repair profile from exhibiting any affects of sagging or sloughing from overly applied material. The bypass pumping shall remain in service as to allow for a stable environment for the first application to cure properly.

(3) The finished wall surfaces and invert surfaces shall be smooth, free of ridges wrinkles and sags. Special care shall be used to insure a smooth transition between the new manhole invert and intersecting pipeline inverts such that flow will not be impaired. Should any of the above conditions occur, liner shall be repaired according to manufacturer's standards or liner shall be rejected and removed at Contractor's expense.

(4) The flow through the structure shall be re-established as soon as practical, following the liner manufacturer's recommendation for appropriate curing.

C. Liner Application: The resin based liner shall be manually sprayed onto all surfaces by a trained crew who are experienced in the application of spray applied rehabilitation systems and has been certified by the manufacturer. Appropriate personal protection equipment shall be utilized, but in every case when applying the rehabilitation system, the personnel in direct contact with the spray atmosphere will always be protected as recommended by the manufacturer.

D. Curing: Active flow may be re-established within the rehabilitated structure immediately following the proper curing time as outlined by the manufacturer. However, before performing a holiday test on the structure, a minimum curing time is needed to allow all rehabilitated surfaces within the interior of the structure to return to ambient temperature. In extremely cool weather, the structure shall be protected while curing is in process to maintain temperatures within the range specified in section 3.03 paragraph (A) above.

3.04 FIELD QUALITY CONTROL

A. The following test/inspection will be performed by the Owner or the Owner's Agent:

(1) Visually verify the absence of leaks from infiltration or inflow.

B. The following test shall be performed by the Contractor on each rehabilitated manhole. The cost for this testing shall be included in the vertical foot (VF) unit price for the manhole lining.

Holiday Detection Test ASTM G62-87: A high voltage holiday detection system may be used to determine if any holidays (voids) exist in the lining. Follow the guidelines of the holiday manufacturer for correct control settings. One such source is the Tinker & Rasor Holiday Tester Model APW.

Should a holiday be detected, it shall be marked and the lining installation contractor will repair the void according to the correct procedure determined by the system manufacturer.

3.05 MANHOLE REQUIREMENTS TABLE

A. For this project, new manhole installation and existing manhole rehabilitation shall be conducted as specified in the attached Table and as shown on the Contract Drawings.

END OF SECTION 02750 – TABLE ATTACHMENT

SECTION 02760
MAINTENANCE OF SEWER FLOW

PART 1: GENERAL

1.01 DESCRIPTION

A. This specification includes by-pass pumping for sewer flow control to allow sewer line and manhole improvements to be made without any disruption in service to system users.

B. When the sewer line depth of flow at the upstream manhole of the manhole section being worked on is above the maximum allowable for television inspection, joint testing and/or sealing, the flow shall be reduced to the level shown below by operation of pump stations, plugging or blocking of the flow or by pumping and bypassing of the flow as specified.

1.02 RELATED SECTIONS

A. Section 02600 – Ductile Iron Gravity Sewer Pipe and Fittings
B. Section 02610 – PVC Gravity Sewer Pipe and Fittings
C. Section 02650 – Cured-in-Place Pipe Lining (CIPP)
D. Section 02700 – Precast Concrete Manholes
E. Section 02750 – Manhole Rehabilitation
F. Section 02765 – Television Inspection
G. Section 02767 – Sewer Line Cleaning

1.03 SUBMITTALS

A. Provide product data describing conformance to ASTM and ANSI Codes of the bypass pipe material.

B. Sanitary Sewer Flow Control Plan

(1) The Contractor shall submit to the Engineer plans and descriptions pertaining to the bypass pumping provisions to be taken by the Contractor regarding the handling of peak flows. No construction shall begin until all submittals have been reviewed by the Engineer and are determined to be complete.

(2) The plan shall include, but not be limited to, details of the following:

a. Sewer plugging plan, including type, location and manufacturer of plugs and emergency release procedures.

b. Locations and number of pumps.

c. Compliance with permits required by the Owner.

d. Staging areas for pumps.

e. Sewer plugging method and types of plugs.

f. Number, size, material, location and method of installation of suction piping.

g. Number, size, material, method of installation and location of installation or discharge piping.

h. Bypass pump sizes, capacity, number of each size to be on site and power requirements. An installed back-up pump capable of handling peak expected flow must be included.

i. Calculations of static lift, friction losses and flow velocity (pump curves showing pump operating range shall be submitted).

j. Downstream discharge plan.

k. Method of protecting discharge manholes or structures from erosion and damage.

l. Thrust and restraint block sizes and locations, if necessary.

m. Sections showing suction and discharge pipe depth, embedment, select special backfill, if necessary.

n. Method of noise control for each pump and/or generator for overnight operation.

o. Any temporary pipe supports and anchoring requirements.

p. Design plans and computation for access to bypass pumping locations indicated on the drawings.

q. Calculations for selection of bypass pumping pipe size.

(3) The Engineer's and Owner's receipt of flow bypass plan does not relieve Contractor from responsibility for means, methods and sequences of construction, requirement to pump peak flows and for safety.

1.04 PROJECT RECORDS

A. The Contractor shall maintain records which indicate the following:

(1) Dates and times of any flow loss from the bypass pumping system.

(2) Dates and times of any backups of flow into private property and contractor action with corrective actions taken.

(3) Date of any public complaints with corrective actions taken.

1.05 REGULATORY REQUIREMENTS

A. Conform to regulatory agencies having jurisdiction over the work.

1.06 FIELD MEASUREMENTS

A. Prior to start of construction, verify by field measurements that existing conditions are as shown on Drawings. Notify Engineer of differences.

1.07 COORDINATION

A. Coordinate field work under provisions of Section 01039, including maintenance of traffic, access to private driveways, sidewalks and emergency 911 services.

B. Coordinate work with local utility companies (private and municipal) for location of existing utilities and protection thereof.

C. Coordinate flow bypassing with Owner/Engineer.

(1) The Contractor shall time the installation of the work around climatological conditions that ensure bypass pumping capacity or the capability of returning the sewer to service upon elevated flow conditions.

(2) The Contractor shall coordinate all pumping setups with the Owner/Engineer.

1.08 SCHEDULING

A. Contractor shall have an approved Sanitary Sewer Flow Control Plan for the bypass pumping station one week prior to beginning mobilization on any sections requiring bypass pumping.

B. Contractor shall be responsible for the installation, operations and removal of all flow bypass facilities and surface restoration.

1.09 OVERNIGHT OPERATION

A. If overnight bypass pumping is necessary, the pumps must be silent pack type and reduce the noise to at least 70 dBa at 30 feet from pump.

B. The system shall be tended by a qualified representative of the Contractor on a 24/7 basis.

PART 2: PRODUCTS

2.01 MATERIALS

A. High Density Black Polyethylene Pipe – ANSI/ASTM D1248 butt heat fusion type joint fittings shall conform to ASTM D2657 and D3261.

B. Lay-flat bypass hose with associated joint fittings.

C. Quick-connect galvanized steel pipe.

2.02 EQUIPMENT

A. All bypass pumping systems shall be designed to pump a minimum of 1.0 MGD flow rate.

B. All pumps used shall be fully automatic self-priming units that do not require the use of foot valves or vacuum pumps in the priming system. The pumps may be gas, electric or diesel powered, but at least one of peak capacity shall be gas or diesel. All pumps must be constructed to allow dry running for long periods.

C. The Contractor shall provide the necessary stop/start controls for each pump.

D. Sewer plugs shall be capable of accommodating the maximum allowable surcharge heads that may be experienced during the construction of this project. The plugs shall also be tied off and readily removed from the system during emergency shutdown of the system.

PART 3: EXECUTION

3.01 DESIGN REQUIREMENTS

A. Maintenance of Flow

(1) The Contractor shall pump or divert flows that occur during the installation of the work, or provide prompt removal of plugs on the sewer to allow gravity operation as may be required to prevent surcharging of adjacent sewers.

(2) The design of the bypass pumping system must allow for prompt dewatering of

the system during periods of non-use or if leakage occurs.

(3) The sewer system shall be returned to gravity flow during periods when not necessary for the installation or work.

B. Siting of Facilities

(1) Contractor shall maintain traffic flow on public streets and in accordance with the MDSHA. In all instances, traffic flow must be maintained to all businesses.

(2) Ramps may be installed to permit access to private driveways. Ramp slopes shall be appropriate for property owners' vehicles.

3.02 PERFORMANCE REQUIREMENTS

A. Before placing the system in operation, it shall be tested fully.

B. The bypass pump pipe shall be rated for at least twice the operating pressure.

C. It is essential to the operation of the existing sewerage system that there be no interruption in the flow of sewage throughout the duration of the project. The Contractor shall provide, maintain, and operate all temporary facilities such as dams, plugs, pumping equipment, conduits, all necessary power and all other labor and equipment necessary to intercept the sewage flow, before it reaches the point where it would interfere with work; carry it past this work; and return it to the existing sewer system downstream of work.

D. The bypass system shall meet the requirements of all codes and regulatory agencies having jurisdiction.

E. The Contractor will not be permitted to stop or impede the sewer flow under any circumstances without having the bypass pumping system fully operational.

F. The Contractor shall maintain sewer flow around the work area in a manner that will not cause surcharge or damage to tributary sewers and that will protect public and private property from damage.

G. Plugging or Blocking: A sewer line plug shall be inserted into the line upstream of the section being worked. The plug shall be so designed that all or any portion of the sewage can be released. During TV inspection, testing and sealing operations, flow shall be reduced to within the limits specified below. After the work has been completed, flow shall be restored to normal.

H. Plumbing and Bypassing: When pumping and bypassing is required, the Contactor shall supply the pumps, conduits and other equipment to divert the flow of sewage around the manhole section in which work is to be performed. The bypass system shall be of sufficient capacity to handle existing flow plus additional flow that may occur as a result of precipitation. The Contractor will be responsible for furnishing the necessary labor

and supervision to set up and operate the pumping and bypassing system. If pumping is required on a 24-hour basis, engines shall be equipped in a manner to keep noise to a minimum. The normal hours of operation shall be 7:00 a.m. to 5:00 p.m., unless approval is given by the Town/Engineer to modify this schedule or unless restricted by MDSHA or other authority.

3.03 FIELD QUALITY CONTROL AND MAINTENANCE

A. Routine Inspection and Maintenance

(1) The Contractor shall inspect all operable bypass pumping systems every two hours or more frequently to ensure their proper operation. Flow bypass pumping operations shall be manned by a qualified contractor representative familiar with pump operation and emergency procedures.

(2) The Contractor shall insure the bypass pumping system is properly maintained.

B. Extra Materials

(1) Spare parts for pumps and piping shall be kept on site.

C. In the event the sewage drains into the storm drainage system, private property or street, the Contractor shall immediately stop the overflow, notify the Inspector, and take the necessary action to clean up and disinfect the spillage to the satisfaction of the Engineer/Owner. If sewage is spilled onto public or private property, the Contractor shall wash down, clean up and disinfect the spillage to the satisfaction of the Engineer/Owner.

D. Depth of flow shall not exceed that shown below for the respective pipe sizes as measured in the manhole when performing television inspection, joint testing and/or sealing.

(1) Maximum Depth of Flow ..... Television Inspection

6" – 10" Pipe ..... 10% of pipe diameter
12" – 24" Pipe ..... 15% of pipe diameter
27" and up Pipe ..... 20% of pipe diameter

(2) Maximum Depth of Flow ..... Joint Testing/Sealing

6" – 10" Pipe ..... 25% of pipe diameter
12" – 24" Pipe ..... 30% of pipe diameter
27" and up Pipe ..... 35% of pipe diameter

E. Flow Control Precautions: When flow in a sewer line is plugged, blocked or bypassed, sufficient precautions must be taken to protect the sewer lines from damage that might result from sewer surcharging. Further, precautions must be taken to ensure that sewer flow control operations do not cause flooding or damage to public or private property

being served by the sewers involved. Any fine resulting from or damage caused by sewage backing up shall be the responsibility of the Contractor. Any damage or destruction to private property caused by sewage backup or overflows shall be the responsibility of the Contractor to correct at his expense.

3.04 PREPARATION

A. Precautions

(1) The Contractor is responsible for locating any existing utilities in the area selected for installation of the bypass pipelines. The Contractor shall minimize the disturbance to existing utilities and shall obtain approval from the Owner and Engineer for any relocation of the bypass pipeline. All costs associated with the relocation of utilities and obtaining of approvals shall be paid by the Contractor.

(2) During all bypass pumping operations, the Contractor shall protect the bypass pumping facilities and existing collection system from damage inflicted by equipment. The Contractor shall be responsible for all intentional or accidental physical damage to the bypass pumping system caused by human or mechanical failure or interference.

(3) During installation of the bypass pumping pipes, the Contractor shall make every effort to minimize the disruption of private property and the inconvenience for neighborhood residents.

(4) The Contractor shall protect all mature vegetation and structures or other obstacles in the path of the pipeline from damage through use of shields and buffering devices. All private property that must be relocated to construct the work must be stored at a location acceptable to the property owner.

(5) In instances where fences must be disturbed for the construction of the pipeline, the property owner shall be consulted to see if the installation of temporary fencing shall be required.

(6) The Contractor shall generate preconstruction videotapes to document the pre-construction condition of the pipeline route.

3.05 INSTALLATION AND REMOVAL

A. If the Contractor elects to route pipe through box culverts or large diameter storm drains to traverse under roads, HDPE pipe is required. Neither lay flat hose nor quick-disconnect pipe will be permitted for these applications. To the maximum extent practical, the pipe shall be out of the stream flow path and to the side of the culvert where visible at all times.

B. If the piping must cross driveways, bypass pump ramps shall be used such that vehicular access can be maintained to the property.

C. The Contractor shall remove manhole sections or make connections to the existing sewer and construct temporary bypass pumping structures only at the access locations indicated on the Contract Drawings and as may be required to provide adequate suction conduit.

D. The pipeline must be located off streets (when not closed to traffic) and sidewalks and on shoulders of the roads.

E. Upon completion of the bypass pumping operations, the Contractor shall remove all the piping, restore all property to pre-construction condition or better and shall restore all pavement and sidewalks.

F. The Contractor is responsible for obtaining any approvals for placement of the temporary pipeline within public ways.

G. Upon system removal, all wastewater must be discharged into the wastewater collection system and pipes flushed.

H. Should bypass pumps or associated piping need relocating during construction, the Contractor shall coordinate with and gain approval of Owner prior to moving equipment and piping.

END OF SECTION 02760

SECTION 02765
TELEVISION INSPECTION

PART 1: GENERAL

1.01 DESCRIPTION

A. After cleaning the sewer main from manhole to manhole, the sections shall be visually inspected by means of closed-circuit television. The inspection will be done one manhole section at a time, and the flow in the section being inspected will be suitably controlled as specified in Section 02760: MAINTENANCE OF SEWER FLOW.

B. For pipes to be lined with CIPP: Prior to the start of any CIPP work, Contractor shall submit to Engineer/Owner for approval, complete CCTV recordings, photos and related logs that demonstrate that all required repairs have been successfully completed, and that the line has been properly cleaned and prepped per the manufacturer's recommendations.

C. Owner will perform CCTV work for all completed lines (CIPP or new) that the Contractor submits in writing as being ready for final inspection. If any problems are found during this inspection and repairs and follow-up CCTV work are required, Contractor shall pay Owner at the Contractor's Unit Price for Base Bid Item 6a for the second and any subsequent re-inspections.

D. Owner will perform CCTV work necessary during Warranty period. If any problems are found during this inspection and repairs and follow-up CCTV work are required, Contractor shall pay Owner at the Contractor's Unit Price for Base Bid Item 6a for the second and any subsequent re-inspections

1.02 RELATED SECTIONS

A. Section 02650 – Cured-in-Place Pipe Lining (CIPP)
B. Section 02760 – Maintenance of Sewer Flow
C. Section 02767 – Sewer Line Cleaning

1.03 SUBMITTALS

A. A sample of video footage photos and log entries shall be submitted prior to the start of any lengthy recording to be reviewed by the Engineer/Owner and approved as standard for the quality of these items for this Project.

B. Each month prior to submitting Application for Partial Payment, the Contractor shall submit one copy of the complete set of video segments (correctly labeled) performed that month, a three-ring binder of the related television inspection logs and any photographs that were taken by the Contractor.

C. Submit written documentation showing current PACP certification for all CCTV technicians to be used on this project.

1.04 REFERENCE SPECIFICATIONS, CODES, STANDARDS AND CERTIFICATIONS

A. CCTV work will be performed in accordance with NASSCO's Pipeline Assessment and Certification Program (PACP) recommended procedure.

B. All camera technicians performing CCTV inspection for the Contractor under this Contract must be PACP certified. Documentation showing current certification for each CCTV technician must be submitted.

PART 2: PRODUCTS

2.01 MATERIALS

A. **Equipment:** The television camera used for the inspection shall be one specifically designed and constructed for such inspection and shall be 5-years old or newer. Lighting for the camera shall be suitable to allow a clear color picture of the entire periphery of the pipe. The camera shall be operative in 100% humidity conditions. The camera should have the ability to pan and tilt for the inspection of the sewer laterals. The cameras, television monitor and other components of the video system shall be capable of producing picture quality to the satisfaction of the Owner/Engineer, and if unsatisfactory, equipment shall be removed and no payment will be made for an unsatisfactory inspection.

PART 3: EXECUTION

3.01 PREPARATION

A. Sewers must be properly cleaned prior to any CCTV work being performed.

B. The pipes shall be dry and free of standing water during the television inspections, so the entire pipe may be clearly seen. The Contractor may have to remove standing water from sags to complete the inspections and meet this requirement. Inspections that do not meet this requirement shall be re-performed by the Contractor at no additional cost to the Owner.

3.02 INSPECTION

A. All inspection shall be performed in accordance with PACP standard practices.

B. **Television Inspection Logs:** Printed location records shall be kept by the Contractor and will clearly show the location in relation to an adjacent manhole of each infiltration point observed during inspection. In addition, other points of significance, such as locations of building sewers, unusual conditions, roots, storm sewer connections, broken pipe, presence

of scale, and corrosion and other discernible features will be recorded, and a copy of the records will be supplied to the Owner.

C. **Photographs:** Digital photographs taken digitally with a 3.1 megapixel or better, or other standard-size photographs of the television picture of problems shall be taken by the Contractor upon request of the Owner/Engineer, as long as such photographing does not interfere with the Contractor's operations.

D. **Videotape Recordings:** The purpose of DVD recording shall be to supply a visual and audio record of problem areas of the lines that may be replayed. Recording playback shall be at the same speed that it was recorded. Slow motion or stop-motion playback features may be supplied at the option of the Contractor. The Contractor shall have all DVD and necessary playback equipment readily accessible for review by the Owner during the project, and shall submit to Engineer/Owner complete sets of progress recordings and photos each month.

3.03 INSTALLATION/APPLICATION

A. The camera shall be moved through the line in either direction at a moderate rate, stopping when necessary to permit proper documentation of the sewer's condition. In no case will the television camera be pulled at a speed greater than 30 feet per minute. Manual winches, power winches and powered rewinds or other devices that do not obstruct the camera view or interfere with proper documentation of the sewer conditions shall be used to move the camera through the sewer line. If an obstruction exists to prevent the camera from entering the pipe, the Contractor shall make such point repairs or remove protruding laterals to allow the camera free access through the pipe.

3.04 FIELD QUALITY CONTROL

A. When manually operated winches are used to pull the television camera through the line, telephones or other suitable means of communication shall be set up between the two manholes of the section being inspected to insure good communications between members of the crew.

B. The importance of accurate distance measurements is emphasized. Distance measurements will be automatically tracked on the video camera via the automatic distance measurement. Distance tracking will begin at 0 feet at the manhole wall where the sewer pipe begins.

C. Pan sewer laterals and any defects found.

D. Contractor is advised that DIP lined with 401 Protecto epoxy coating is extremely dark and additional or auxiliary lighting may be required.

3.05 ACCEPTANCE

A. The Owner/Engineer will review submitted videos, photos and logs to determine if they are acceptable. If the line cleaning was inadequate, Contractor shall re-clean and re-televise the

line and re-submit for approval. Cleaning and televising will only be paid for once acceptable to Owner/Engineer.

END OF SECTION 02765

SECTION 02767
SEWER LINE CLEANING

PART 1: GENERAL

1.01 DESCRIPTION

A. This section covers requirements for cleaning sewer lines and manholes.

B. The intent of the sewer line cleaning is to remove all foreign materials from the lines and restore the sewer to the original carrying capacity. Since the success of the other phases of work depends a great deal on the cleanliness of the lines, the importance of this phase is emphasized. Should conditions exist to prevent cleaning, repairs will be made to those sections to allow completion of cleaning.

1.02 RELATED SECTIONS

A. Section 02650 – Cured-In-Place Pipe Lining (CIPP)
B. Section 02760 – Maintenance of Sewer Flow
C. Section 02765 – Television Inspection

1.03 SUBMITTALS

A. Summary of proposed equipment and procedures to be used for line cleaning, debris removal and disposal.

PART 2: PRODUCTS

2.01 MATERIALS

A. **High-Velocity Jet (Hydrocleaning) Equipment:** All high-velocity sewer cleaning equipment shall be constructed for ease and safety of operation. The equipment shall have a selection of two or more high-velocity nozzles. The nozzles shall be capable of producing a scouring action from 15 to 45 degrees in all size lines designated to be cleaned. Equipment shall also include a high-velocity gun for washing and scouring manhole walls and floor. The gun shall be capable of producing flows from a fine spray to a solid stream. The equipment shall carry its own water tank, auxiliary engines, pumps and hydraulically driven hose reel.

B. **Mechanically Powered Equipment:** Bucket machines shall be in pairs with sufficient power to perform the work in an efficient manner. Machines shall be belt operated or have an overload device. Machines with direct drive that could cause damage to the pipe will not be allowed. A power rodding machine shall be either a sectional or continuous rod type capable of holding a minimum of 750 feet of rod. The rod shall be specifically heat-treated steel. To insure safe operation, the machine shall be fully enclosed and have an automatic safety clutch or relief valve.

PART 3: EXECUTION

3.01 INSPECTION

A. **Final Acceptance:** Acceptance of sewer line cleaning shall be determined after television inspection tapes have been submitted to the Owner/Engineer and have been approved. If television inspection shows the cleaning to be unsatisfactory, the Contractor shall be required to reclean and reinspect the sewer line until the cleaning is shown to be satisfactory.

3.02 INSTALLATION/APPLICATION

A. **Sewer Cleaning:** The designated sewer sections shall be cleaned using high-velocity jet, or mechanically powered equipment. Selection of the equipment used shall be based on the conditions of lines at the time the work commences. The equipment and methods selected shall be satisfactory to the Owner/Engineer. The equipment shall be capable of removing dirt, grease, rocks, roots, sand and other materials and obstructions from the sewer lines and manholes. If cleaning of an entire section cannot be successfully performed from one manhole, the equipment shall be set up on the other manhole and cleaning again attempted. All debris must be removed from the sewer and properly disposed of by the Contractor at no additional cost to the Town.

B. **Root Removal:** Roots shall be removed in the designated sections where root intrusion is a problem. Procedures may include the use of mechanical equipment such as rodding machines, bucket machines and winches using root cutters and porcupines and equipment such as high-velocity jet cleaners. Chemical root treatment may be used at the option of the Owner.

C. **Material Removal:** Sludge, dirt, sand, rocks, bricks, grease and other solid or semisolid material resulting from the cleaning operation shall be removed at the downstream manhole of the section being cleaned. Passing material from manhole section to manhole section, which could cause line stoppages, accumulations of sand in wet wells or damage to pumping equipment, shall not be permitted.

D. For lines to be lined with CIPP or manholes to be spray-lined, cleaning shall meet all of the requirements of the manufacturers of those systems.

3.03 FIELD QUALITY CONTROL

A. Sewer cleaning shall proceed from upstream sewers to downstream sewers unless otherwise approved by the Engineer. No cleaning shall take place in a particular sewer segment until all upstream pipe segments have been cleaned. If cleaning is done in a downstream pipe segment in order to facilitate overall cleaning operations, the segment shall be re-cleaned at no additional cost, after all pipe upstream of that segment has been cleaned.

B. The Contractor shall take precautions to avoid damage or flooding to public or private property being served by the line being cleaned. The Contractor shall be responsible for all flooding and pay for cleanup from flooding to the satisfaction of the property owner. The Contractor shall have a local cleaning service under contract to immediately address any backups prior to commencing any sewer cleaning work. The Contractor shall take care in cleaning old sewers and shall protect existing sewers from damage caused by improper use of cleaning equipment.

C. **Disposal of Materials**: The Contractor shall be responsible for properly disposing of all the debris removed from the sewers during the cleaning operation in accordance with local, state and federal regulations.

END OF SECTION 02767

SECTION 02900
RESTORATION OF PAVED AND GRASSED AREAS

PART 1: GENERAL

1.01 DESCRIPTION

This section covers restoration of paved areas and grassed areas. Restoration shall be performed in general conformance with these requirements. However, pavement restoration shall be in strict compliance with MDSHA requirements whether specifically referenced herein or in the Details or not, and grassed areas shall be ultimately restored to the satisfaction of the individual property owner.

Refer to the Standard Details on the Contract Drawings for additional requirements for pavement restoration.

1.02 RELATED SECTIONS

A. Section 02200 – Excavation, Backfill and Compaction

1.03 QUALITY ASSURANCE

A. **Areas and Features to be Restored:**

(1) All areas, including natural features occurring thereon, which are damaged or disturbed by the Contractor's operations, shall be restored, repaired or replaced to the same or superior condition which existed prior to construction or as modified herein or as shown on the Drawings.

(2) Artificial features shall be restored equal to a new condition or as modified herein or as shown on the Drawings.

B. **Source Quality Control:**

(1) Use materials conforming to requirements of the Maryland Department of Transportation, State Highway Administration Standard Specifications for Construction and Materials, Latest Edition.

(2) Use products of a bituminous concrete producer regularly engaged in production of bituminous concrete conforming to the standards referenced herein.

(3) Maintain quality of work by using products of a qualified bituminous concrete producer and qualified plant operating workmen.

1.04 REFERENCES

A. The MDOT noted herein refer to sections contained in the Maryland Department of Transportation State Highway Administration Specifications for Construction and Materials. The references pertain only to materials, construction, equipment, methods and labor.

B. Maryland Standard Method of Tests.

C. American Society for Testing and Materials:

(1) ASTM D 1557, Moisture-Density Relations of Soils and Soil-Aggregate Mixtures, Using 10 lb. (4.5 Kg) Rammer and 18-inch (457 mm) Drop, Test Methods for.

(2) ASTM D 2167, Density of Soil in Place by the Rubber-Balloon Method, Test Method for

D. American Association of State Highway and Transportation Officials:

(1) AASHTO T180, Moisture-Density Relations of Soils Using a 10 lb. Rammer and an 18-inch Drop.

1.05 SUBMITTALS

A. Topsoil – Submit sieve analysis and characteristics of topsoil as listed in PART 2 – MATERIALS.

B. Seed mixture data.

C. Source and certification data for all sod types needed on Project.

D. Certificates: Furnish certification from bituminous and aggregate producer attesting that materials conform to requirements of Maryland Department of Transportation State Highway Administration Specifications.

1.06 PACKING AND SHIPPING

A. All seed furnished for this project shall be delivered in standard size unopened bags of the vendor, showing weight, mixture, vendor's name and guaranteed analysis.

1.07 STORAGE

A. Seed shall be properly stored in dry conditions at the site of the work.

(1) Any seed damaged or spoiled during storage shall be replaced by the Contractor.

B. All sod (new and existing to be reused) must be carefully stockpiled and kept lightly and uniformly damp.

1.08 ENVIRONMENTAL CONDITIONS

A. Topsoil shall not be delivered or placed in a frozen or muddy condition.

B. Seeding is to be done on dry or moderately dry soil.

(1) Seeding is to be done when the wind velocity does not exceed 5 miles per hour.

1.09 PROJECT CONDITIONS

A. Protection:

(1) Protect paved surfaces outside of the limits of work. Repair pavement outside limits damaged by construction operations at no additional expense to the Owner.

(2) The Contractor shall be liable for damages to municipal roads caused by his equipment. The repairs may include lane or full roadway width overlays as directed by the Owner. No additional payment will be made for repairs to municipal roads damaged by the Contractor.

1.10 SCHEDULE

A. The Contractor is advised to do all seeding during the periods of March 15th to May 1st or August 15th to October 15th.

(1) Seeding may be conducted under unseasonable conditions without additional compensation and at the option and full responsibility of the Contractor.

1.11 WARRANTY

A. Any new, reestablished, replaced or disturbed plant material that fails to respond properly within the one-year guarantee period shall be replaced as specified above at the Contractor's expense.

PART 2: PRODUCTS

2.01 MATERIAL

A. **Topsoil**

(1) Topsoil shall be natural, fertile, friable agricultural soil capable of sustaining healthy vegetative growth.

(2) Topsoil shall meet the following gradation requirements free of stones, roots, sticks and other foreign substances.

GRAIN DIAMETER	SIEVE SIZE	PERCENT PASSING BY WEIGHT
6.3 mm	**6.3 mm**	**100**
4.75 mm	**No. 4**	**60 – 85**
0.075 mm	**No. 200**	**20 – 45**
0.002 mm	--	**7 - 27**

a. Topsoil shall contain less than 52 percent sand.

(3) The pH of topsoil shall be between 6.0 and 7.6.

(4) Topsoil shall contain no less than 6.0 percent organic matter.

(5) Topsoil may be from previously excavated, stockpiled and protected materials, provided the materials meet the requirements for topsoil.

B. **Fertilizer**

(1) General Fertilizer

a. Refer to Contract Drawings. Other commercially available fertilizers, such as 20-10-10 and 12-6-6, may be utilized provided the spreading rates are adjusted to provide the minimum requirements for nitrogen.

C. **Seed**

(1) All seed shall be fresh, recleaned and of the latest crop year.

(2) Each component shall meet or exceed the minimum State and Federal requirements for purity and germination for that component.

(3) The weed content of each component shall not exceed 0.1 percent.

(4) Refer to Contract Drawings for recommended seed mixtures.

a. Variations may be recommended by qualified personnel but shall not be used without approval by the Engineer.

(5) For uncultivated areas furnish perennial rye grass seed.

D. **Mulch for Tree or Shrub Plantings** – Mulch shall consist of dry, clean, hardwood chips.

E. **Mulch for Seeded Areas** – Mulch shall be oat, wheat or rye straw or hay, free from noxious weeds and other materials which may interfere with the establishment of a healthy stand of grass.

F. **Peat Moss** – As recommended by the supplier of nursery stock.

G. **Coarse Aggregate Base Course**:

(1) Type B Select Material.

H. **Bituminous Materials and Pavements**:

(1) Bituminous Tack Coat: MDOT Section 904.04.

(2) Surface Course: Hot mixed, hot laid, Bituminous Surface Course, conforming to MDOT Section 904.06.

(3) Base Course: Hot mixed, hot laid, Bituminous Base conforming to MDOT Section 904.06.

PART 3: EXECUTION

3.01 TRENCH BACKFILL

A. Backfill of the trench shall be accomplished immediately after the pipes and manholes have been installed. Backfill and compaction shall be specified in Section 02200, as shown in the Details and as presented below.

(1) In paved MDSHA roads and Town/County roads, the Contractor shall remove all excavated soil from the site and import backfill and install it as shown on Detail No 100. Costs associated with removing and disposing of the excavated soil and supplying and importing the stone shall be included in the various unit costs bid.

(2) In grassed or easement areas, the excavated soil may be used for backfill material provided the soil is acceptable as defined in Section 02200.

3.02 RESTORATION OF PAVED AREAS

A. Pavement restoration in MDSHA and Town/County roads shall be in accordance with the Details on the Contract Drawings and all MDSHA and Town/County requirements. The costs for restoring MDSHA and Town/County roads including all requirements specified herein shall be included in the various bid items unless a separate pay item for pavement restoration is include.

The Contractor or his subcontractor performing excavation in MDSHA and Town/County roads may perform the pavement restoration as long as the work is to the satisfaction of the MDSHA, Town/County and Engineer. If the work is not satisfactory, the Contractor shall hire a pavement contractor to perform the restoration work at no additional cost to the Owner.

Parking lots, asphalt driveways, sidewalks, and curbs and gutters impacted by the work shall be restored per Details on the Contract Drawings. Install #57 stone under all new concrete work for bedding and support prior to placing concrete.

The pavement restoration work shall be completed immediately after the trenches are backfilled and compaction results are approved unless otherwise approved by the Engineer and MDSHA.

B. Subbase Construction: Install coarse aggregate base course in accordance with MDT. Install base course to after-compaction thickness indicated on Drawings.

C. Bituminous Pavement Construction: Method of preparing mixture, placing mixture, compaction and protection of in-place bituminous concrete for paving shall comply with MDT Section 504. Minimum thickness of bituminous concrete base and surface courses as indicated on the drawings.

(1) Use Bituminous Tack Coat material to seal joints in wearing courses as specified in MDT Section 504.03.07.

(2) Dust Control: Provide effective dust control by sprinkling water, by the use of calcium chloride or by any other methods approved by the Engineer. Use dust control measures where, when and in a manner required by the Engineer.

D. In some instances, the MDSHA may require that the existing roadway be milled down, and an overlay be installed with a paving machine over all pavement patches installed. In this case, the overlay shall be installed per the Details. The Engineer and MDSHA will determine which patches require the overlay and will determine the limits of each overlay. The final elevation of new manholes shall accommodate the overlay when required.

3.03 RESTORATION OF GRASSED AREAS

A. The Contractor shall be responsible for restoring all grassed areas affected by the work to equal or exceed pre-construction conditions. Restoration shall be performed at the end of each day unless otherwise approved by the Engineer. Work will not be allowed to continue if the restoration is not up-to-date. The costs for restoring grassed areas, including all requirements specified below, shall be included in the various bid items, unless a separate pay item for grass restoration is included. Payment will not be made for the various work items until the restoration is complete and satisfactory to the Engineer or unless otherwise approved by the Engineer. The Engineer will consider in such a decision whether the Contractor is using the subject areas for accessing the upstream work, in which case the area cannot be restored. Final payment will not be made until all

areas are completely restored to the satisfaction of the Engineer and property owner.

The Contractor or his subcontractor performing excavation work in grassed areas shall initially be considered acceptable to perform the restoration work. However, if the Contractor's work is not satisfactory to the Engineer, Owner or property owners, the Contractor shall hire a local, professional landscaping company to perform the work at no additional cost to the Owner. The Contractor should consider retaining a local landscaping company during the warranty period to handle all complaints and warranty issues.

The general requirements for grass restoration work are detailed below. In general, the Contractor shall match the species of the existing grass and plants and shall plant such species in a manner and at times as recommended by local nurseries and authorities over grass planting and growing. If the existing species cannot be planted at the time of year when the restoration work is required, the Engineer may approve the temporary restoration of the area with grass that can grow at that time of year. The property owner must be advised of the plan and approve it. Any such temporary restoration shall be removed and the proper restoration performed during the proper growing season. The Contractor is encouraged to plan for varying restoration conditions at different times of the year and to schedule the work in a manner for the best possible restoration conditions. It will not be acceptable to unduly delay restoration until proper growing conditions exist. The Contractor must keep restoration up-to-date as specified above.

(1) *Restoration of Manicured Areas and Lawn Areas* – Manicured and lawn areas shall be as defined by the Engineer and shall generally be considered any yard area of a residence or business that is routinely mowed, is well landscaped, has an established, thick stand of grass and/or has been sodded in the past. In manicured and lawn areas, the Contractor shall sod all grassed areas disturbed by the work, shall re-plant or install new bushes, ornamentals, shrubs, etc. as impacted by the work, shall restore disturbed beds including re-mulching and replacing borders, and shall restore any and all other plants and area disturbed to equal or exceed pre-construction conditions. The Contractor shall match the species of existing grass and plants. The Contractor may strip the existing grass and use it as sod for grass restoration or shall provide new sod.

If the existing sod is stripped and used for restoration, the Contractor shall neatly strip the sod (minimum 2 inches below the surface) and the top 4 inches of soil and carefully stockpile the soil and sod for later installation. Sod shall be professionally stripped in neat, even strips with square corners. Uneven and jagged strips of existing sod shall not be permitted to be reused. New sod will be required. The Contractor may have to strip existing sod for use, if the existing species of grass is not available. The Contractor shall be responsible for checking on the availability of new sod to match all grass species in the project area and submitting the list of species and sod availability to the Engineer prior to disturbing any grassed area.

If new sod is used for restoration, the Contractor shall match exactly the species of the existing grass including providing strongly rooted (2" minimum thick root

mat), certified sod not less than 2 years old and free of weeds and undesirable native grasses. Sod must be capable of growth when planted.

For all sodding work, the Contractor shall provide clean, finely graded topsoil for the top 4 inches below the sod. The Contractor may strip the top 4 inches of soil prior to excavation and stockpile this topsoil in a separate pile for use. If the existing soil is not separated and stockpiled, the Contractor shall import approved, clean topsoil for use at no additional cost to the Owner.

The Contractor shall grade lawn areas to be a smooth, even surface with loose, fine textured soil. The area shall be rolled and raked. High spots shall be removed, and low spots shall be filled with suitable topsoil to meet finish grades. Fine grading should be limited to areas which can be planted in the immediate future.

After fine grading and prior to planting, restore prepared areas to the above specified condition if eroded or otherwise disturbed. Prepared areas shall be moistened before planting lawn. Lime and fertilize as recommended by local nurseries. It is recommended that the Contractor take soil samples so proper lime and fertilizer rates can be determined.

The Contractor shall lay sod within 24 hours from time of stripping. The sod shall be laid to form a solid mass with tightly fitted joints with ends and sides of sod strips butted - not overlapped. Strips shall be staggered to offset joints in adjacent courses. Work shall be performed from boards to avoid damage to subgrade or sod. The sod shall be tamped or rolled lightly to ensure contact with subgrade. The Contractor shall work sifted soil into minor cracks between pieces of sod, remove excess to avoid smothering adjacent grass and water sod with fine spray immediately after planting, so the entire sod blocks are moist but not soggy.

Begin maintenance of lawns immediately after planting and continue for at least 30 days and until completely established. Maintain lawn by watering and other operations such as rolling, regrading and replanting as required to establish a smooth, acceptable lawn, free of eroded or bare areas. Watering schedule shall be as recommended for that type of sod by local nurseries and shall be at least 1 inch of water per week including rainfall. Contractor is to submit watering schedule to Engineer. Water used shall be provided by the Contractor. Property owners shall not be involved in watering operations, unless the property owner requires that they be allowed to water the grass and the Engineer approves.

Sodded lawns will be acceptable provided requirements, including maintenance, have been complied with and healthy, well rooted, even colored, viable lawn is established, free of weeds, open joints, bare areas, and surface irregularities to the satisfaction of the Engineer and property owner. All bare areas shall be re-sodded.

(2) *Restoration of Easement Areas and Non-Manicured Areas* – For the purposes of these Specifications, easement areas and non-manicured areas include any area

outside of the areas described above for manicured and lawn areas. In general, the easement areas will be outside of any regularly maintained lawn/yard areas, but in some cases may be considered a yard with patchy or spotty grass where thick sod would not blend in with the surrounding grass.

All easement and non-manicured areas may be restored with sod as specified above or by planting new grass. If new grass is planted, the grass variety/species shall match the existing grass and shall be new seed and free of weeds and contamination. The Contractor shall submit the proposed seed mix along with the seed manufacturer's recommendations for liming, fertilizing, planting, watering and maintaining. All such recommendations shall be strictly followed.

Prior to any planting, the Contractor shall grade all easement areas (non-yard areas) smooth as approved by the Engineer/Owner in the field. The Owner must be able to drive heavy sewer maintenance equipment along the sewer route to access every manhole unless otherwise approved. In addition, slopes of easements shall be such that the Owner can mow the easements with their bush-hog equipment. There shall be no ruts or wash-out areas in the easements and no exposed rock or debris. The Contractor shall install culvert pipes or large stone (such as Maryland SHA Class I rip-rap) for draining easement areas as necessary and as required by the Engineer/Owner. All exposed tree roots shall be cut, all trees completely removed or stumps ground to 24 inches below grade (where approved by the Owner), and all damaged tree limbs cut and removed. The final grading of all easement areas must be approved by the Engineer/Owner prior to planting any grass. The top 4 inches of soil shall be clean, fine graded topsoil either stripped and stockpiled or imported.

For yard/lawn areas, the Contractor shall grade areas to be a smooth, even surface with loose, fine textured soil. The area shall be rolled and raked. High spots shall be removed, and low spots shall be filled with suitable topsoil to meet finish grades. As specified above, the top 4 inches or soil shall be clean, fine graded topsoil, either stripped and stockpiled or imported.

Fine grading should be limited to areas which can be planted in the immediate future. After fine grading and prior to planting, restore prepared areas to the above specified condition if eroded or otherwise disturbed. Prepared areas shall be moistened before planting lawn.

The Contractor shall lime and fertilize the soil prior to planting as recommended by the seed manufacturer, spread seed at the recommended rates, mulch area with clean wheat straw and water area immediately after planting as recommended. It is recommended that the Contractor take soil samples so that proper lime and fertilizer rates can be determined.

Contractor shall maintain the planted area for at least 30 days and until completely established. Maintenance shall include watering per the seed manufacturer's recommendations (as least 1 inch of water per week including rain), re-fertilizing as recommended and required, and cutting the grass to continue healthy growth as required. Contractor to submit watering and

maintenance schedule to Engineer. Water used shall be provided by the Contractor. Property owners shall not be involved in watering operations unless the property owner requests that they be allowed to water the grass and the Engineer approves.

Grassed areas will be acceptable provided requirements, including maintenance, have been complied with and healthy, well rooted, even colored, viable grass is established that is free of weeds, bare areas, and surface irregularities, to the satisfaction of the Engineer and property owner. All bare areas shall be re-seeded and maintained until accepted by the property owner and approved by the Engineer.

3.04 CLEAN-UP AND MAINTENANCE

A. During construction, surfaces of all area including, but not limited to, roads, streets and driveways shall be maintained on a daily basis to produce a safe, desirable and convenient conditions.

(1) Surfaces shall be swept and flushed after backfilling, and recleaned as dust, mud, stones and debris caused by the work, or related to the work again accumulates.

(2) Failure of the Contractor to perform this work shall be cause for the Engineer to order the work to be done by others and backcharge all costs to the Contractor.

B. Repair or Correction of Unsatisfactory Conditions: All unsatisfactory conditions resulting from the work shall be corrected.

C. Continuously maintain temporary pavement without additional compensation until it is replaced with permanent pavement.

D. Any subnormal or dangerous condition caused by the work, on any surface, shall be repaired or corrected within two hours of observance or notification of its existence. If repairs or corrections are not made within this period, the Owner shall cause to have the work completed with the resulting cost subtracted from the Contractor's next monthly payment request. Any such costs shall be deemed a reduction in the total amount due the Contractor under the contract and no subsequent reimbursement shall be made to the Contractor by the Owner for these costs.

END OF SECTION 02900

SECTION 02959
SEWER MAIN AND LATERAL CONNECTION SEALING

PART 1: GENERAL

1.01 DESCRIPTION

Section includes requirements for sealing of all sewer line joints, defects and leaking sewer lateral connections by chemical grouting.

1.02 QUALITY ASSURANCE

A. Follow ASTM F2304 and F2554-05.

B. Test sealed joints and lateral connections by air pressure.

1.03 SUBMITTALS

A. Submit following Section 01330.

(1) Catalog data showing manufacturer's clarifications and updates, ASTM references, material composition, specifications, and physical and chemical properties of the grout.

(2) Manufacturer's recommended procedures for handling, storing, mixing and injecting the grout.

(3) Method of Construction

a. Access manholes and site locations.

b. Work dimensions.

c. Existing utilities.

d. Size of working area.

e. Impacted portions of existing sewer.

f. Site access points.

g. Bypass pumping plan showing:

1) Intake manhole.

2) Service over pumping.

3) Receiving manhole.

4) Expected flows.

5) Pump size.

6) Pipe layout.

7) Backup equipment.

h. Procedures to monitor upstream mains for backup impacts.

i. Procedures for setup and breakdown of pumping operations.

(4) Emergency plan detailing procedures in event of pump failures, sewer overflows, service backups, and sewage spillage.

a. Maintain copy of emergency plan on site for duration of project.

B. Submit following Section 01450.

(1) Grout manufacturer's certification that Contractor is approved installer of their system and certificates of training in handling, mixing, and application of grout for sanitary sewer line and joint and lateral connection sealing for each crew member involved in sealing process.

(2) ASTM certified lab test results for field installations in USA of same grout system as proposed for actual installation.

a. Test results must verify grout physical and chemical properties specified herein have been achieved in previous field applications.

b. Third party is defined as ASTM or equivalent accredited materials testing firm with no financial or directorial link to grout manufacturer or Contractor.

(3) CCTV inspection reports, and electronic downloads made before and following sewer main's joint sealing, and original copies of CCTV inspections color DVDs furnished to Engineer within 5 days.

(4) Documentation for products and installers will receive Engineer's approval before acceptance or injection of grout.

1.04 DELIVERY, STORAGE, AND HANDLING

A. Protect, store, and handle during transportation and delivery, while stored on-site, and during installation following manufacturer's recommendations.

B. Grout Material Found to be Defective or Damaged Due to Manufacture or Shipment:

(1) Remove from Contract site and replace materials found defective or damaged following Engineer's direction, at no cost to the Town.

PART 2: PRODUCTS

2.01 MATERIALS

A. Grouting.

(1) Properties and characteristics.

a. Will perform in the presence of infiltrating water, during injection.

b. Packaged for field storage, handling requirements with minimum spillage and worker safety.

c. Mixed with proper equipment and personnel thoroughly familiar with the chemicals involved following manufacturer's recommendations, chemical safety data sheet, and safety regulations.

(2) Cured grout:

a. Submergible in water without degrading.

b. Not biodegradable.

1) Additives may be used to meet this requirement, without effecting long term strength.

c. Chemically stable and resistant to concentrations of acids, alkalis, and organic materials found in normal sewage.

(3) Composition.

a. Acrylamide gel:

1) Minimum of 10 percent acrylamide base material by weight in the total grout mix.

2) Higher concentration percent of acrylamide base material may be used to increase strength or offset dilution during injection.

3) Able to tolerate some dilution and react in moving water during injection.

4) Approximately 2 centipoise viscosity, which can be increased with additives.

5) Constant viscosity during reaction period.

6) Controlled reaction time from 10 seconds to 1 hour.

7) Curing reaction producing a homogenous, chemically stable, nonbiodegradable, firm, flexible gel.

8) Able to prevent dehydration and increase-mix viscosity, density and gel strength by use of additives.

   a) Diatomaceous earth (Celite 209 or equal) can be added to a concentration of five percent.

   b) Use of other additives following manufacturer's recommendation and Engineer's approval.

9) Root control additive 2, 6-Dichlorobenzonitrile, which may be added following manufacturer's recommendation and Engineer's direction.

b. Urethane gel:

1) One part urethane prepolymer thoroughly mixed with between 5 and 10 parts water by weight.

   a) Recommended mix ratio is 1 part urethane prepolymer to 8 parts of water (11 percent prepolymer).

2) Liquid prepolymer having a solids content by weight of 77 percent to 83 percent, specific gravity of 1.04 (8.65 pounds per gallon),

and flash point of 200 degrees F; and viscosity of 600 to 1,200 centipoises at 70 degrees F.

3) Water in pH range of 6.5 to 8.0 for correct prepolymer reaction.

4) Cure time of 80 seconds at 40 degrees F, 55 seconds at 60 degrees F, and 30 seconds at 80 degrees F when 1 part prepolymer is reacted with 8 parts of water only.

5) Viscosity with increases from about 10 to 60 centipoises in first minute for 1 to 8 prepolymer/water ratio at 500 degrees F.

6) Curing reaction producing a chemically stable, non-biodegradable, tough, flexible gel.

7) Able to increase mix viscosity, density, gel strength and resistance to shrinkage by using additives in water component of grout.

8) Root control additive 2, 6-Dichlorobenzonitrile, may be added following manufacturer's recommendation and Engineer's direction.

9) Minimum of 15 percent shrink control agent supplied by same manufacturer.

d. Acrylate gel:

1) Minimum of 11 percent acrylate base material by weight.

a) In total grout mix, a higher concentration (percent) of acrylate base material may be used to increase strength or offset dilution during injection.

b) If acrylate base material is in a 40 percent solution 27.5 percent by weight of total grout mix to have 11 percent base material.

2) Low toxicity of the acrylate base material.

3) Able to tolerate some dilution and react in moving water during injection.

4) Viscosity of approximately 2 centipoises which can be increased with additives.

5) Constant viscosity during the reaction period.

6) Controlled reaction time from 10 seconds to 1 hour.

7) Curing reaction producing a homogeneous, chemically stable, nonbiodegradable, flexible gel.

8) Able to, prevent dehydration and to increase-mix viscosity, density and gel strength by use of additives.

   a) Diatomaceous earth (Celite 209 or equal) can be added to a concentration of five percent.

   b) Use of other additives following manufacturer's recommendations and Engineer's approval.

9) Root control additive 2, 6-Dichlorobenzonitrile, may be added following manufacturer's recommendation and Engineer's direction.

2.02 EQUIPMENT

A. May consist of a CCTV system, necessary chemical grout containers, pumps, regulators, valves, hoses, joint sealing packers for various sizes of sewer pipes, and lateral bladders.

B. Grouting packer.

   (1) Diameter less than pipe size, with cables attached at each end to pull it through the line.

   (2) Designed to allow a restricted amount of sewage to flow through device, in lines where sewage flows do not exceed maximum depth for joint testing/sealing following manufacturer's recommendation.

   (3) Approved Manufacturers:

      a. American Logiball, Inc.

      b. Submit "or Equal".

PART 3: EXECUTION

3.01 PUBLIC NOTIFICATION

A. Maintain service usage throughout duration of project.

(1) Public Notification Program: Delivered written notices to each home or business immediately after sealing operation.

3.02 PREPARATION

A. Access: Through existing manholes.

B. Sewer Cleaning and Surface Preparation.

(1) Cleaning of the Main Line Sewers.

a. Hydraulic high pressure jetting of reaches is permitted.

b. Before sealing work, lightly clean each line section.

1) Lightly clean is defined as less than 3 passes of hydraulic cleaner.

c. Remove sludge, dirt, sand, grease, root, and other materials from pipe and collect and remove resulting debris from downstream manhole of sewer section being cleaned.

d. Collect debris and remove from site.

1) Transportation and disposal of cleaning debris: Following jurisdiction requirements and Engineer's approval.

e. Sewers damaged as a result of improper use of cleaning equipment will be promptly repaired by the Contractor at no additional cost to the Commission.

f. Provide equipment, devices, and tools required for this Contract.

g. Clean sewer main within 72 hour immediately preceding chemical grouting of sewer house connections.

(2) Re-cleaning: If Engineer finds main is not sufficiently cleaned, CCTV and sealing equipment will be removed and main re-cleaned at no additional cost to the Commission.

C. Pre-sealing Reaming:

(1) Ream or trim protruding taps following Specification Section 02955.

3.03 SEALING OPERATION

A. Joint or Lateral Connection Sealing.

(1) Seal by internal chemical methods grout joints, defects or leaking lateral connection that have been specified to be sealed, or show sign of visible leaks, under Engineer's direction.

(2) After sealing of joint, defect or connection, perform a post air test.

(3) Sewers that Engineer deems damaged as result of Contractor's operations will be promptly repaired to Engineer's satisfaction at no cost to the Commission.

(4) Grouting materials that set to a hard, rigid product capable of intrusion into sewer line is not acceptable.

(5) Remove roots detected during the initial CCTV inspection immediately before any sealing operation.

B. Procedure for Application.

(1) Force chemical grouting material into or through faulty joints, defects or lateral connection by a system of pumps, hoses, and sealing packers.

a. Position packer over faulty joint or lateral connection by means of measuring device and CCTV camera in line.

b. Expand packer end bladders using controlled pressure and for lateral connections, use lateral packer equipped with lateral bladder.

1) If a tight seal is not obtained, remove the equipment and make adjustments, obtain a tight seal.

2) In this isolated area, pump grout material through hose system at controlled pressures which are in excess of groundwater pressures.

(2) Design pumping unit, metering equipment, and packer devices so proportions and quantities of materials can be regulated following type and size of leak being sealed.

(3) Set chemical mixing ratios following manufacturer's recommendations and Engineer's adjustments, never less than 30 seconds.

(4) Operate void pressure monitoring equipment, described herein, during sealing operations.

(5) Integrate CCTV, grout pumping, and air pressure monitoring equipment; so proportions, quantities, and void pressure for materials and sealing can be instantly monitored and regulated following type and size of joint, break, or leak.

(6) Base amount of chemical being pumped on number of pumped strokes delivered for each sealed sewer main joint, defect or leaking connection.

a. Record and make results available to the Engineer.

b. Use maximum pump outlet settings as follows:

Pump Ratio	Hose Diameter Outlet	Pressure (lbs)
10:1	1/2 inch	27
10:1	1/8 inch	23
5:1	1/2 inch	40
5:1	5/8 inch	35

(7) In the event large voids are encountered on outside of sewer, including the possibility of "piping" holes to ground surface which could cause excessive use of grout material, at Engineer's direction change operating pressures and pumping rates.

a. Accomplish changes in operating procedures by reducing pressures and pumping rates followed by termination of pumping until temporary "set" of the gel is obtained on the outside of pipe, and then, after sufficient lapse of time, followed by an increase in pressure and resumption of pumping until proper seal of the joint, defect or connection is obtained.

(8) Grout injection is completed when the void pressure monitoring equipment displays pressure 8 PSI or higher that does not drop more than 1 PSI after 30 second holding time.

a. Engineer may require on any sealed defects a move of the packer forward or backward, wiping away excess grouting material and allowing CCTV camera to move to suitable position for inspection and /or air test.

b. Air test each sealed joint, defect or connection after grout injection, reseal failed joints and air test again.

(9) Flush or push forward excess grouting material to next downstream manhole, and removed from sewer system.

a. Dispose of debris following Section 02512, chemical grout manufacturer's recommendation, and local, State, and Federal regulations.

b. In no case is excess grout material from upstream section(s) allowed to accumulate and be flushed down the sewer.

(10) In the event that sewage back-up occurs and enters a dwelling, respond within 2 hours of being notified and be responsible for cleanup, repair, property damage costs and claims.

(11) Provide approved plug and/or by-pass pumping if grouting operations restrict or prevent simultaneous sewage flow passage.

a. Manage sanitary sewer overflow following Section 02530.

(12) Place a door tag, supplied by the Commission, at each address affected by sealing operation.

C. Joint, Defect or Lateral Connection Sealing Verification.

(1) Deflate packer bladders after completing each seal until a zero void pressure is shown on the monitoring equipment.

(2) Re-test the joint, defect or lateral connection as described herein.

a. If a zero void pressure is not achieved, clear residual grout material from packer or make needed equipment adjustments allowing a true pressure reading.

b. Re-seal joints, defects, or connections that do not meet specified test criteria and re-test until test criteria are met.

c. Additional testing and sealing will be at no additional cost to the Commission.

D. Residual Sealing Material.

(1) Leave no residual grout material capable of reducing the pipe diameter or restricting flow.

E. Records.

(1) Keep complete, accurate, and legible records of the operation for each joint, defect or connection sealed.

(2) Failure to fill out logs completely will result in non-payment for the questioned mainline joint, defect or connection.

(3) The work site will not be accepted until Engineer receives original record.

a. Show on record of operation:

1) Identification of the work site: Complete component, address, county page & grid, 200 foot sheet.

2) Station of each seal measured from upstream manhole, test pressures, verified address of lateral, estimated visible leakage (gpm) from connection or lateral, number of pump strokes and amount of grout in place, beginning, ending, pressure loss, re-test pressures and verification that lateral is clear after sealing process.

F. Air Testing.

(1) Testing procedures for equipment consist of applying Engineer's designated pressure into each void area created by testing device.

(2) Continuously monitor test pressure during test with digital pressure gage reading in 1/10 psi units and CCTV inspection system.

(3) If specified test pressure is not achieved release pressure, make adjustments with equipment, and test again.

a. Repeat procedure sealed feature passes test.

b. Additional sealing and re-testing after initial sealing and re-testing at no cost the Commission.

(4) Once specified pressure in test area has been displayed on meter above ground, stop application of pressure and commence 10 second stabilization period.

(5) Observe meter for 20 seconds and if pressure in test area drops to below 2.1 psi, the connection has failed the test.

AIR TEST TABLE	
INITIAL AIRTEST PRESSURE	AFTER 20 SECONDS AIR TEST PRESSURE
12-11	7.2-6.6
10.9-10.0	6.6-6.0
9.9-9.0	6.0-5.4
8.9-8.0	5.4-4.8
7.9-7.0	4.8-4.2
6.9-6.0	4.2-3.6

G. Obstructions.

(1) During course of sealing operations obstructions may be encountered preventing travel of packer and camera.

a. Should obstruction not be passable, begin sealing operations from opposite end of sewer reach.

(2) If additional obstructions are encountered after re-employment and no means are available for passing obstructions without damage to equipment, then remaining sections of sewer main not sealed may be temporarily excluded from work requirements of Contract, until point repair is completed.

3.04 POST- SEALING INSPECTION

A. Internally CCTV sewer mains involved in the sealing operation following Section 02956.

3.05 ACCEPTANCE

A. When sealed joint, defect, and lateral connections pass the post air test.

PART 4: MEASUREMENT AND PAYMENT

4.01 SEALED JOINT

A. Measurement: By each successfully sealed joint or defect.

B. Payment: At unit price for each size listed in Bid Schedule.

(1) Payment includes plugging or by-pass pumping, pre-sealing cleaning, reaming taps, removal of extraneous materials from sewer main, labor and equipment necessary to seal joints, defects, and post sealing air test,

4.02 SEALED LATERAL CONNECTION

A. Measurement: By each lateral connection sealed and air tested.

B. Payment: At unit price for each size listed in Bid Schedule.

(1) Payment includes plugging or by-pass pumping, pre-sealing cleaning, removal of extraneous materials from sewer main and lateral, labor and equipment necessary to seal connection, post sealing air test, and test to ensure that lateral is clear.

4.03 SEALING MATERIAL

A. Measurement: By gallon of grout used.

B. Payment: At unit price listed in Bid Schedule.

(1) Payment includes materials, additives, storage, calculations, mixing, testing for in place percentage and gel time tests.

SECTION 03300
CONCRETE AND GROUTS

PART 1: GENERAL

1.01 DESCRIPTION

This section covers all cast-in-place concrete, including reinforcing steel, forms, finishing, curing and appurtenant work. All concrete shall be air-entrained.

All cast-in-place concrete shall be accurately formed and properly placed and finished, as indicated on the Drawings, in the Details and/or specified herein.

The Contractor shall inform the Engineer at least 24 hours in advance of the times and places at which he intends to place concrete.

1.02 RELATED SECTIONS

The publications listed below form a part of this specification to the extent referenced.

A. American Concrete Institute (ACI)

ACI 211.1	Selecting Proportions for Concrete
ACI 301	Specifications for Structural Concrete
ACI 304	Measuring, Mixing, Transporting and Placing Concrete
ACI 305	Hot Weather Concreting
ACI 306	Cold Weather Concreting
ACI 308	Standard Practice for Curing Concrete
ACI 309	Practice for Consolidation of Concrete
ACI 315	Details and Detailing of Concrete Reinforcement
ACI 315R	Manual of Engineering and Placing Drawings for Reinforced Concrete Structures
ACI 318	Building Code Requirements for Structural Concrete
ACI 347	Recommended Practice for Concrete Formwork

B. American Society for Testing and Materials (ASTM)

ASTM A615	Deformed and Plain Billet Steel Bars for Concrete Reinforcement
ASTM C31	Making and Curing Concrete Test Specimens
ASTM C33	Concrete Aggregates
ASTM C39	Compressive Strength of Concrete Specimens
ASTM C88	Soundness of Aggregates
ASTM C94	Ready-Mixed Concrete
ASTM C136	Sieve Analysis of Fine and Coarse Aggregates

ASTM C143	Slump of Portland Cement Concrete
ASTM C150	Portland Cement (Rev. B)
ASTM C231	Air Content of Freshly Mixed Concrete
ASTM C494	Chemical Admixtures for Concrete
ASTM C618	Fly Ash and Pozzolan for Use in Concrete
ASTM C989	Iron Blastfurnace Slag for Use in Concrete

1.03 SUBMITTALS

Submit shop drawings and catalog cuts for the following.

A. Concrete Mix Design: Concrete mixes used on this project shall be either established mixes verified by "Field Test Data" or new customer laboratory designed "Trial Mixtures". Requirements for either option are as follows.

All data shall be dated within the last year. Partial submittal will not be reviewed.

(1) List amount and source of mix ingredients.

- Cement
- Fly ash
- Fine aggregate
- Coarse aggregate
- Water
- Admixtures including superplasticizer

(2) Certified tests of fine and coarse aggregates meeting the requirements of ASTM C33.

(3) Certified statement from source of fine and coarse aggregates pertaining to history of alkali-aggregate reactivity (ASR) or DOT confirmation that ASR issues are not evident at the aggregate source.

(4) Strength Test Reports: The average strengths shall be higher than the required average compressive strengths (f/cr) as per ACI 301, paragraph 4.2.3.3.

(5) Typed letter signed by officer of supplier stating that all ingredients for proposed mix(es) are identical and from the same source as ingredients used for concrete in provided test reports.

(6) Certified mill test of cement and fly ash or slag.

(7) One-page admixture catalog cuts.

B. Submit one-page catalog cut for bonding agent.

C. Submit one-page catalog cut for retarding admixture and surface-applied hot weather evaporation reducer.

D. Submit catalog cuts for slab sealer and adhesive system used to install dowels and bolts into concrete and masonry.

E. Reinforcing Steel: Submit shop drawings in accordance with ACI 301, ACI 315 and ACI 315R as modified below.

(1) Drawings shall be clearly drawn and show enough detail to locate every bar without the need to refer to the Contract Drawings. All construction and control joints must be shown. Photocopies of Contract Drawings, in whole or in part, will not be acceptable.

(2) No fabrication shall commence until shop drawings are approved. All bars shall be shop fabricated.

1.04 COORDINATION

A. Coordinate all concrete placement with mechanical, electrical, plans and specifications.

1.05 QUALITY ASSURANCE

A. Bar Identification and Mill Test Reports: All steel shall have the manufacturer's mill marking rolled into the bar which shall indicate the producer, size, type and grade.

B. Concrete testing prior to placement.

PART 2: PRODUCTS

2.01 MATERIALS

A. Cement: ASTM C150, Type I or II.

B. Fine Aggregate: Clean natural sand, ASTM C33. Artificial or manufactured sand will not be acceptable

C. Coarse Aggregate: Crushed rock, washed gravel, or other inert granular material conforming to ASTM C33, except clay and shale particles shall not exceed one percent. Smooth or rounded stone will not be acceptable.

D. Water: Clean and free from deleterious amounts of oil, acids, alkalies or organic materials.

E. Admixtures:

Water-Reducing:	ASTM C494, Type A or D
Air-Entraining:	ASTM C260

F. Reinforcing Steel:

Bars:	ASTM A615, Grade 60, deformed in accordance with ASTM A305, except ¼" bars may be plain.
Welded Wire Fabric:	ASTM A185
Bar Supports:	CRSI Class 1 plastic protected or Class 2 stainless steel protected.

G. Fiber Reinforcement: Where fiber reinforced concrete is shown or specified, the concrete shall have added at the time of initial mixing at least 5 pounds of glass fiber per cubic yard of concrete.

H. Forms:

Plywood:	Product Standard PSI, waterproof, resin-bonded, exterior type, Douglas fir
Lumber:	Straight, uniform width and thickness, free from knots, offsets, holes, dents and other surface defects
Form Oil:	Light colored paraffin oil or other acceptable non-staining material
Polyethylene Film:	Product Standard PS17, 6 mils or thicker

I. Membrane Curing Compound: ASTM C-309, Type 2

J. Non-Shrink Grout: Quikrete Commercial Grade Non-Shrink Grout, Master Builders "Masterflow 713 Grout" or "Set-Grout", Sauereisen Cements "F-100 Level Fill Grout", U. S. Grout's "Five Start Grout" or approved equal.

K. Epoxy Grout: Two-component, solvent free, moisture insensitive, high modulus, high strength, Type I and II, Grade 3, Class B and C, Epoxy Resin Adhesive meeting the requirements of ASTM C-881 by Sika, Master Builders, Sauereisen or equal.

PART 3: EXECUTION

3.01 LIMITING REQUIREMENTS

Concrete shall be watertight, resistant to freeze-thaw cycles and moderate sulfate attack, abrasion resistant, workable and finishable. Unless otherwise specified, concrete shall be controlled within the following limiting requirements.

A. Minimum Cement Factors: The quantity of Portland cement, expressed in pounds per cubic yard, shall be not less than that indicated in the following table.

	Course Aggregate Size from No 4 Sieve to			
Concrete Slump	**3/8"**	**½"**	**¾"**	**1"**
3 inches	629	592	564	536
4 inches	639	611	583	555
5 inches	658	630	602	573

B. Ratio of Fine to Total Aggregates: The ratio of fine to total aggregates based on solid volumes (not weights) shall be:

Coarse Aggregate Size	**Minimum Ratio**	**Maximum Ratio**
3/8 inch	0.45	0.60
½ inch	0.40	0.55
¾ inch	0.35	0.50
1 inch	030	0.46

C. Total Water Content: Total water content of concrete shall not exceed 5.4 gallons of water per hundred pounds of cement in the mix.

D. Slump: Concrete slump shall be kept as low as possible consistent with proper handling and thorough compaction. Unless otherwise authorized by the Engineer, slump shall be a minimum of 3 inches and a maximum of 5 inches.

E. Total Air Content: The total volumetric air content of concrete after placement shall be 5 percent plus or minus one percent.

F. Admixtures: The admixture content, batching method and time of introduction to mix shall be in accordance with the manufacturer's recommendations. A water-reducing admixture and an air-entraining admixture shall be included in all concrete. No calcium chloride or admixture containing chloride from other than impurities from admixture ingredients will be acceptable.

G. Strength: The minimum acceptable compressive strength as determined by ASTM C39 unless otherwise specified shall be:

Age	Minimum Compressive Strength
7 days	3,000 psi
28 days	4,000 psi

3.02 STORAGE OF MATERIALS

Cement shall be stored in suitable moisture-proof enclosures. Cement that has become caked or lumpy shall not be used.

Aggregates shall be stored so segregation and the inclusion of foreign materials are prevented. The bottom 6 inches of aggregate piles in contact with the ground shall not be used.

Reinforcing steel shall be carefully handled and shall be stored on supports that will keep the steel from contact with the ground.

3.03 BATCHING AND MIXING

Concrete shall be furnished by an acceptable ready-mixed concrete supplier and shall conform to ASTM C94.

A. Consistency: The consistency of concrete shall be suitable for the placement conditions. Aggregates shall float uniformly throughout the mass, and the concrete shall flow sluggishly when vibrated or spaded. The slump shall be kept uniform.

B. Delivery Tickets: A delivery ticket shall be prepared for each load of ready-mixed concrete. A copy of each ticket shall be handed to the Engineer by the truck operator at the time of delivery. Tickets shall show the quantity delivered, the amount of each material in the batch, the outdoor temperature in the shade, the time at which the cement was added and the numerical sequence of the delivery.

3.04 FORMS

Forms shall be designed to produce hardened concrete having the shape, lines and dimensions indicated on the Drawings or in the Details. Forms shall be substantial and sufficiently tight to prevent leakage of mortar and shall be maintained in proper position and accurate alignment.

Forms for pavement, curbs or gutters shall be made of steel and shall be supported on thoroughly compacted earth. The top face of pavement forms shall not vary from a true plane more than ¼ inch in 10 feet.

Forms shall be thoroughly cleaned and oiled before concrete is placed.

Where concrete is placed against gravel or crushed rock which does not contain at least 25 percent material passing a No. 4 sieve, such surfaces shall be covered with polyethylene film to protect the concrete from loss of water. Joints in the film shall be lapped at least 4 inches. Film shall not be used under roads.

A. Form Ties: Form ties shall be of the removable end, permanently embedded body type, and shall have sufficient strength and rigidity to support and maintain the form in proper position and alignment without the use of auxiliary spreader.

B. Edges and Corners: Chamfer strips shall be placed in forms to bevel all salient edges and corners, except the top edges of walls and slabs which are to be tooled, and edges which are to be buried. Unless otherwise noted, bevels shall be ¾ inch wide.

C. Form Removal: Forms shall not be removed or disturbed until the concrete has attained sufficient strength to safely support all dead, live and construction loads. Care shall be taken in form removal to avoid surface gouging, corner or edge breakage and other damage to the concrete.

3.05 REINFORCEMENT

Reinforcement shall be accurately formed and positioned and shall be maintained in proper position, while the concrete is being placed and compacted. Unless otherwise indicated on the drawings, the details of fabrication shall conform to ACI 315 and 318. In case of conflict, ACI 318 shall govern. Mechanical connections shall be used only as indicated on the Drawings.

All reinforcing bars and supplies shall be stored off the ground and protected from oil, paint, grease, rusting or scale. Bending of bars shall be done in accordance with the requirements of ACI 315. All bars shall be bent cold and in the shop.

Steel reinforcing shall be accurately positioned and secured against displacement by using concrete or metal chairs, spacers or other devices to properly support and fasten the reinforcing. Splices shall not be made at points of maximum stress, nor shall all bars be spliced at the same location. All bars shall be a splice of a minimum 30 bar diameters.

Metal accessories shall include all spacer, ties, chairs, bolsters and other devices required to support, fasten and hold the reinforcing steel in place and shall meet the requirement of ACI 315.

Wire mesh reinforcing shall have the spacing and gage shown on the Drawings or in the Details. Mesh shall be pulled taut and furnished with sufficient support to hold it in position during placing of the concrete. Mesh shall be lapped one space at all splices and wired together at every other interval.

3.06 PLACEMENT

Concrete shall be conveyed to the point of final deposit and placed by methods which will prevent segregation or loss of ingredients. During and immediately after placement,

concrete shall be thoroughly compacted and worked around all reinforcement and embedments and into the corners of the forms. Concrete shall be compacted by immersion-type vibrators, vibrating screeds or other suitable mechanical compaction equipment. The use of jitterbug tampers to compact concrete flatwork will not be permitted.

Concrete shall not be placed in any forms until all reinforcing steel, pipes, sleeves, inserts, anchors and other appurtenances have been installed and inspected.

Concrete that has contained its mixing water for more than 45 minutes shall not be placed. Concrete shall not be placed when the temperature is 20 degrees F and falling, or when freezing temperatures are predicted for the next 24 hours. All concrete placed in weather above 90 degrees F shall be covered by shading, sprinkling or other approved means for a minimum of 24 hours. Construction joints shall be made where shown on the Drawings or in the Details. When replacing existing concrete, the concrete shall be sawed, thoroughly cleaned and all laitance removed.

3.07 TESTING

A. Air Content: An air content test shall be made from each batch of concrete from which concrete compression test cylinders are made. The Contractor shall provide all equipment and supplies necessary for the testing. Air content shall be determined in accordance with ASTM C173 or ASTM C231.

B. Slump: A slump test shall be made from each batch of concrete from which concrete compression test cylinders are made. Slump shall be determined in accordance with ASTM C143.

C. Test Cylinders: Compression test specimens shall be made, cured, stored and delivered to the laboratory in accordance with ASTM C31 and C39.

One set of concrete test cylinders shall be cast for each concrete pour. A set of test cylinders shall consist of four cylinders, two to be broken and to have compressive strengths averaged at 7 days, and two to be broken and to have compressive strengths averaged at 28 days. All concrete required for testing shall be furnished by the Contractor. No additional compensation will be paid to the Contractor for concrete so used.

Testing of the cured cylinders shall be performed by an independent testing laboratory at the expense of the Owner. The Contractor shall deliver the cylinders to the Engineer at the end of each day that concrete pours are made.

3.08 FINISHING

Recesses from form ties shall be filled flush with mortar. Fins and other surface projections shall be removed from all formed surfaces, except exterior surfaces that will be in contact with earth backfill.

Unless otherwise specified, unformed surfaces shall be screeded and given an initial float

finish, as soon as the concrete has stiffened sufficiently for proper working. Any piece of coarse aggregate which is disturbed by the float or which causes a surface irregularity shall be removed and replace with mortar. Initial floating shall produce a surface of uniform texture and appearance with no unnecessary working of the surface.

Initial floating shall be followed by a second floating at the time of initial set. The second floating shall produce a finish of uniform texture and color. The completed finish for unformed surfaces shall be the finish produced by the second floating.

A. Pavement: Following placement, consolidation and the disappearance of bleed water, the concrete surface shall be broom finished with a broom acceptable to the Engineer. The broom shall be not less than 18 inches wide and made from good quality bass or bassine fibers not more than 5 inches long. The broom finishing shall produce regular corrugations not over 1/8 inch deep. The broom shall be pulled square across the surface from edge to edge, with adjacent strokes slightly overlapped and shall not tear the concrete surface.

The surface of pavements shall not vary more than 1/8 inch under a 10 foot straightedge placed parallel to the center line.

B. Curb and Gutter: Curb and gutter shall be finished to the shape indicated on the Drawings, in the Details or to match existing shapes. After the forms have been removed, all exposed edges shall be rounded using an edging tool having a 1/8 inch corner radius. Exposed surfaces shall be float finished and given a light broom finish at the time of initial set, using a horsehair broom applied at right angles to the length of curb and gutter.

C. Sidewalks: Concrete surfaces shall be screeded to the proper elevation and contour. All aggregates shall be completely embedded in mortar. Screeded surfaces shall be given an initial float finish as soon as the concrete has stiffened sufficiently for proper working. Any piece of coarse aggregate which is disturbed by the float or which causes a surface irregularity shall be removed and replaced with mortar. Initial floating shall produce a surface of uniform texture and appearance, with no unnecessary working of the surface. Initial floating shall be followed by a second floating at the time of initial set.

Floated surfaces shall be given a light broom finish, using a horsehair broom to provide a non-slip surface. Brooming shall be done at right angles to the length of the walk.

Sidewalks shall be edged using a 3 or 4 inch wide edging tool having a 1/8 inch corner radius. Edger lap marks at corners of each slab shall be carefully removed. False joints shall be provided at right angles to the length of the walk using a grooving tool with 1/8 inch radius. The finished edge on each side of the joint shall be the same width as the edging tool used. False joints shall divide each sidewalk into sections having a length equal to the width of the walk unless specified otherwise.

The finished surface of all sidewalks shall match the existing surfaces, shall be neat in appearance, shall be sloped to drain and shall not pond water.

3.09 CURING

Concrete shall be protected from loss of moisture by water saturation or by membrane curing for at least 7 days after placement.

Water saturation of concrete surfaces shall begin as quickly as possible after initial set of the concrete. Unformed surfaces shall be covered with polyethylene film tarpaulins or sand to retain the water. Water shall be applied as often as necessary to keep the concrete saturated for the entire curing period.

Membrane curing compound may be used in lieu of water curing on concrete which will not be covered later with mortar or additional concrete. Membrane curing compound shall be spray applied at coverage of not more than 300 square feet per gallon. Unformed surfaces shall be covered with curing compound within 30 minutes after final finishing. If forms are removed before the end of the specified curing period, curing compound shall be immediately applied to the formed surfaces before they dry out. Curing compound shall be suitably protected against abrasion during the curing period.

Concrete shall be protected against freezing for at least 7 days after placement.

3.10 REPAIRING DEFECTIVE CONCRETE

Defects in concrete surfaces shall be repaired to the satisfaction of the Engineer. All concrete which is honeycombed or otherwise defective shall be cut out and removed to sound concrete with edges square cut to avoid feathering.

Concrete repair work shall conform to Chapter 9 of ACI 301 and shall be performed in a manner that will not interfere with thorough curing of surrounding concrete. Repair work shall be adequately cured.

3.11 CONCRETE FOR MANHOLES

Concrete for manholes shall conform to the requirements specified herein.

3.12 CONCRETE FOR PIPE BLOCKING AND PIPE ENCASEMENT

Concrete for buried blocking and encasement of pipe shall conform to the limiting requirements specified herein, except that the cement factor and total water content may be adjusted to provide a minimum compressive strength of 3,500 psi at 28 days. Concrete shall have a slump of not less than 3 inches or more than 5 inches when placed. Prior to placing concrete, the excavation shall be dry and free of standing water.

END OF SECTION 03300

STANDARD SPECIFICATIONS

WATER SYSTEM

Section 200

GENERAL

A. Description.

1. This section includes construction, testing and disinfecting of permanent water supply, fire protection and distribution piping to the limits indicated in accordance with the Contract Documents.

B. Quality Assurance.

1. Chlorination and field tests

a. The Contractor without extra compensation shall chlorinate and field test all new main installation before connecting them to the existing system. The Engineer shall determine the amount of main to be chlorinated and tested at any one time and reverses the right to separate the installation into several test sections, in the event of long extensions, or installation of pipe designed for different head conditions, or for other reasons.

b. The Contractor shall cap and buttress the new main between the sections of the existing pipe.

c. The Contractor shall furnish at his own cost and expense all necessary bulkheads, caps, plugs or other fittings required to stop off, temporarily, the main for test purposes.

d. After the main is satisfactorily tested according to the requirements of the specifications, the Contractor shall remove the buttresses and caps and connect the new main with the existing main by means of sleeves and spacers or other approved methods.

e. A hydrous solution of high test calcium hypochlorite of lime or chlorine gas shall be discharged into the main near the point where the main is charged per AWWA C601. The amount of high test calcium hypochlorite of lime or chlorine gas shall be sufficient to produce a residual of ten parts per million by weight, of free chlorine, after a contact period of twenty-four hours. If the required residual is not obtained, the Contractor shall repeat the chlorination until this residual requirement is met.

f. While the main is filled with chlorinated water, the pressure shall be raised to 150 psi. This test pressure shall be maintained at the high point on the main for at least two hours.

g. After the satisfactory completion of the hydrostatic tests the new installation shall then be subjected to a leakage test at working pressure, of at least twenty-four hours duration. This test shall show a leakage not exceeding twenty-four gallons per inch of diameter per mile per twenty-four hours. Until the leakage test requirements are met, the Contractor shall make all repairs that may be necessary to to accomplish this. After all test have been satisfactorily completed. including the removal of chlorine the Contractor shall connect the new water main with the distribution system.

h. During all leakage testing, no valve in that section under test shall be operated by other than County personnel who have been assigned to testing duty by the Engineer.

i. Should test results show any visible leakage, displacement or damage, the Contractor shall repair the leakage, displacement or damage and retest until specified conditions are met, to the satisfaction of the Engineer, at no cost to the County.

j. Testing for sprinkler systems including yard piping shall be hydrostatically tested at not less than 200 psi. This test pressure shall be maintained and measured at the low point of the system for at least two hours. Installation and testing of the system shall be in accordance with National Fire Protection Association Standard No. 13 "Sprinkler System".

2. Quality assurance for precast concrete utility structures is specified.

II. MATERIALS

A. General

1. The Contractor shall furnish all pipe, fittings, fire hydrants, valves, valve boxes, meter yokes and vaults, and manhole or vault frames, covers and steps and all glands, gaskets, nuts and bolts for mechanical joint pipe and all other necessary materials for proper completion of the work.

2. The Town will furnish all meters.

B. Materials Requirements

1. Pipe and fittings

a. General - all pipe of the same material and size shall be furnished by the same manufacturer. Each pipe length and fitting shall be clearly marked with the manufacturer's name and trademark.

b. Ductile iron pipe shall meet the requirements of AWWA C151 with mechanical joint or push on joint. Pipe shall be bituminous coated outside and cement lined with double thickness inside in accordance with AWWA C104. Cure cement lining with a bituminous seal coat.

(1) 3" & 4" size pipe shall be class 51

(2) 6" and larger size pipe shall be class 50

(3) Fittings for use with ductile iron pipe shall be Class 250 gray cast iron conforming to AWWA C110 and C151, or Class 350 ductile iron. Ductile iron shall conform to ASTM A536, minimum grade 70-50-05. Nominal thickness of DI fittings shall be equal to, or exceed, Class 53 ductile iron pipe thicknesses. Radii of curvatures shall conform to AWWA C110. Provide accessories as required to connect with plain end of slip joint pipe or cut pipe. Gaskets shall be plain rubber and tee head bolts and hexagon nuts shall be low alloy steel, USALLOY, CORTEN-LOY or equal.

(4) Fittings shall be of uniform quality, true to pattern, strong, tough, of even grain, sound, smooth, without cold shuts, swells, scabs, blisters and sand holes, cracks or other defects. Plugs, filled holes and welds will not be allowed. Fittings shall be clean and entirely free of grease and oil, substantially free of blacking, dirt, sand, rust, slag and fluxing. Remove rough spots in sockets or on plain ends or walls before lining and coating.

(5) Fittings shall be bituminous coated outside and cement lined with double thickness inside in accordance with AWWA C104.

(6) Flanges shall be cast intergrally with body and shall have the same thickness over their entire circumference. Faces shall be perpendicular to axis of pipe.

(7) Bolt holes in fitting flanges shall straddle the vertical centerline when the fitting is positioned to change the fluid flow in a horizontal direction. Drill or core bolt holes completely through flanges so as to be free of sand and projections. Gage to assure dimensional bolt circle control, location and size of holes and concentricity with the socket or gland lip.

c. Copper pipe shall be seamless, type K and meet requirements of ASTM B88. Fittings shall be copper meeting requirements of ASTM B62, free of injurious blowholes, porosity, shrinkage, cracks or other injurious defects, smooth and well cleaned, and shall meet requirements of AWWA C800 and the following:

(1) Corporation Stops and Couplings:

Copper tube outlets of all corporation stops shall be of the flare or pack joint type and shall be fitted with a coupling nut threaded according to AWWA C-800, which shall have a machined bearing in the skirt part equal to or greater in length than the outside diameter of the corresponding size type K copper pipe, in inches. Protect inlet threads with a plastic coating in shipment.

The corporation stops and couplings size 3/4" thru 1" shall be Mueller catalog number H-15000, or H-15050; Ford number F600 or F1000. Test certificates shall be furnished by the Contractor, certifying that all corporation stops have been subjected to a production line test by the manufacturer of 85 psig air pressure while submerged in water. in both open and closed position of the key, and shall show no leakage. Period of observation shall be ten second minimum. Stops shall be subjected to a 300 psig hydrostatic test and shall not leak top or bottom and shall not show signs of structural failure.

(2) Couplings:

The copper to copper couplings shall be those known as the three part type consisting of a tubing connection coupling nut. The copper tube end of the couplings shall be the flare or pack joint type for connecting to type K copper service pipe. The opposite end, and all coupling nuts shall be threaded in accordance with AWWA C-800.

The iron pipe end of all copper to iron pipe fittings shall be threaded in accordance with the National Bureau of Standards Handbook H-28 Stan-

dard for American National Pipe Threads.

The copper line couplings shall be one of the following manufacturer's or equal.

CATALOG NUMBERS

DESCRIPTION	MUELLER	FORD
3 Prt. Cu. to Cu.	H-15400	C22 Series
Cu. to M. IPT	H-15425	C28 Series
Cu. to Fem. IPT	H-15450	C22 series
Strt. Pack joint		C44 Series

(3) Meter Yokes and Fittings

Yoke shall be Ford # V-72-18 5/8" x 3/4".

2. Joint Material.

Mechanical joints shall conform to requirements of AWWA. Push on joints shall conform to requirements of AWWA C111.

Flanged joints shall conform to requirements of AWWA C110.

Mechanical couplings shall be as indicated, manufactured by Dresser, Smith Blair or equal.

3. Valves

a. Gate Valves, size 6", 8" and 10", shall be iron body, bronze mounted, mechanical joint, double disc, parallel seat, with non-rising stem and stand 2 inch square operating nut, conforming to AWWA C500. Extension stems shall be provided for valves where operating nut is more than 4 feet below finished grade. All valves shall open left.

b. Air release valves shall be two inch, universal, with surface diameter 1/4 inch, range of working pressure from 0 to 165 pounds, stainless steel float, resilent seat and screwed connection; Crispin Model U-20, Apco combination air release valve Model 145-C, or equal.

c. Globe valves shall be two inches, Class B meeting requirements of FS WW-51A, 150 lbs. screwed.

d. Flanged backflow preventer shall be complete with gate valve and the inlet side of the inlet gate valve shall be fitted with the necessary vent cock and fittings. Valve body shall be galvanized cast iron with bronze working parts and springs, plastic coated carbon steel valve discs, neoprene coated cotton duck diaphragm.

Valve shall be designed to auction a maximum working pressure of 175 psi and a hydrostatic test pressure of 350 psi.

Valve shall be Hershey Products, Inc. Model Bosco, Cla-Vel Co., or equal.

e. Valve boxes shall be of cast iron, complete with cover marked WATER. Valve boxes shall be extension type, with screw adjustment, and with flared base. The boxes shall be of such length as to permit adjustment in both directions, to the depth of cover required over the pipe at the valve location. Boxes shall not be set so as to transmit surface loads to the valve. (See Standard Detail).

4. Fire Hydrants

American Darling B-62-B, 3-way, dry top, compression type with safety flange, painted safety yellow, conforming to AWWA C502. Each hydrant shall have one 4-1/2 inch diameter pumper (steamer.) nozzle and two 2-1/2 inch hose nozzles, nozzle gaskets, 5-1/4 inch valve, 1-1/2 inch pentagonal operating nut, open left. Both the hose nozzles and pumper (steamer) nozzle shall have National Standard Thread. Hydrants shall be designed for 4-1/2 foot bury and six (6) inch mechanical joint inlet.

a. Indicate depth of bury by one of the following methods:

1. Attach metal tag, location and tag as approved by the Engineer.

2. Raised figures on the barrel to show depth in feet. The figure shall be on the barrel - just below the swivel flange so that it is visible when installed. The figure shall be raised at least 1/8 inch above the barrel surface and the height of the figure shall be at least one inch and shall be integrally cast with the barrel.

b. The elbow shall be cast iron or ductile iron in accordance with ANSI-21.10. The inlet connection shall be a six (6) inch, Class 250, mechanical joint bell and shall meet the general requirement for Standard Mechanical Joint Cast Iron Pipe and Fittings, furnished with necessary accessories for each such mechanical joint. The bolts shall be made of low alloy steel such as Corten or U.S. Alloy. The gaskets shall be made of rubber. Glands shall be made of high strength cast iron consistent in design and strength with the elbows with which they are to be used.

Elbow or inlet connection shall be shipped assembled with hydrant.

c. The outside of the hydrant above the finished ground line to a height just above the hydrant nozzles (or to the hydrant bonnet, if so construed) shall be thoroughly cleaned, primed and then painted with two coats of Rhinamel Gray No. 202-31-00 paint as manufactured by the Grow Chemical Coating Corp., Tropical Paint Div., or equal. Top section of hydrant above the nozzles (on the hydrant bonnet, if so construed) shall be likewise cleaned and then painted with two coats of Safety Yellow as manufactured by the previously mentioned vendor, or equal. Proposed paint substitution shall be presented to the Superintendent with complete details, painting design, paint color chips and at least one pint of the proposed paint.

d. External operating and cap nuts shall be of pentagonal shape. The pentagon shall measure 1-1/2 inches from point to flat at the base of the nut and 1-7/16 inches at the top.

Hydrant shall be open by turning operating nut left (counter clockwise). Direction of opening shall be indicated on top of operating nut by means of a raised arrow.

e. Stuffing box packing shall be the "O" ring seal.

f. The following parts are to be bronze as specified in AWWA C-502.

Drain Valve, Valve Seats or Seat Rings Stuffing Box (Bronze-brushed Cast Iron) Stuffing Box Parts Hold Down Nut Threaded Stem Nut (sleeve).

g. The barrel of the hydrant shall be in two cast iron or ductile iron sections, designed to break at or near the finished grade; the cast iron shall conform to American Standard Specifications ANSI-A21-51. The nozzle section shall be attached to the lower barrel section by means of a tapered flange ring held in place by suitable "hydrant head" bolts and nuts. The flange and flange rings shall be so designed that the top or upper barrel section, including the bonnet and operating nut, may be revolved 360 degrees for facing without disturbing the bottom section of the barrel. (The use of a split bronze insert ring will not be permitted).

h. Fire hydrant connection appurtenances shall be as follows:

(1) Anchor coupling shall be from 12 to 13 inches long, weighing approximately 70 pounds, double thickness cement lined, and bituminious sealed as per AWWA C104, six inch cast iron mechanical joint, class 250, with integrally cast standard mechanical joint gland on one end and one loose end rotable ductile iron gland on the other end. The plain end shall be of sufficient dimension to form a mechanical joint with a six inch mechanical joint bell.

(2) Straps, bolts and nuts shall meet requirements of ASTM A36 and A301, as specified in Section

10. Castings shall be grey iron as specified in Section

11. Connection Appurtenances

a. Tapping sleeves shall be mechanical joint, furnished complete with plain rubber gaskets, mechanical joint accessories, or armored tipped, and suitable for use on Ductile iron pressure pipe. Hub sleeves shall fit Class "D" pipe with maximum allowance for outside diameter. Connecting flange joint between sleeve and valve shall conform to MSS (Manufacturers Standardization Society of the Valve and Fittings Industry) Standard SP60, for pipe up to 12 inches in diameter.

b. Tapping assemblies, saddles, and clamps shall be as per Interpace, Adams, Mueller or equal. Provide threaded outlet as required.

c. Service clamps shall be double strap galvanized with corporation stop thread of appropriate size, neoprene gasket cemented in place, cadmium plated nuts and straps (for ductile iron pipe) and shall be the diameter required. Clamps shall be as manufactured by Mueller, Skinner, Dresser or equal.

d. Service saddle for installation on Class 150 pressure pipe shall be cast iron with AWWA threads sized as required, furnished with neoprene gaskets. Size shall be as manufactured by General Engineering Co., or equal. Use mastic supplied by, or approved by, the manufacturer.

III. EXECUTION

A. Laying Pipe

1. A minimum of 3'6" cover shall be maintained over all mains.

2. Trench excavation and backfill and test pits shall be specified in Detail 101 . Excavate test pits as specified in Detail sufficiently in advance of trench construction so that reasonable changes in line and grade can be made where the location of existing structures varies from that shown. The Contractor shall adjust pipeline profile as required at connections to existing mains, subject to the approval of the Superintendent. Completely excavate sufficient trench to assure that no unforeseen obstructions exist before commencing pipe installation. Work occasioned by failure to take such precautions shall be performed at no cost to the Town.

3. Only proper and suitable tools and appliances for the safe and convenient handling and laying of pipes and fittings shall be used. Pipe, fittings and valves shall be carefully handled and lowered into the trench. Under no circumstances shall any pipe or fitting be dumped or rolled into the trench or be allowed to drop against the pipe or fitting already in the trench. Great care shall be taken to prevent the pipe lining and coating from being damaged, and any lining of coating damaged in any way shall be repaired by the Contractor to the satisfaction of the Superintendent.

4. The pipe and fittings shall be thoroughly cleaned before they are laid and shall be kept clean until the acceptance of the completed work. Just before being lowered into the trench, each length of pipe or fitting shall be well swabbed to insure the removal of any dirt or foriegn matter therefrom. After being placed in the trench, and prior to joining one tablespoon of HTH or Perchloron, shall be placed in each length of pipe or fitting. After the pipe has been "homed", the end shall be kept covered until the next length is laid. At the close of work each day the end of the pipe line shall be tightly closed with an expansion type stopper so that no dirt or foriegn substance may enter the line and this stopper shall be kept in place until pipe laying is again resumed.

5. Installation

a. Align pipe so that no shoulder or unevenness results on the inside of the mains. Cutting where required to fit into the line or to bring to the required location, shall be done in a satisfactory manner with an approved cutting tool or tools which will leave a smooth edge and at right angles to the axis of the pipe and not otherwise damage the pipe or lining. Such cuts shall be made at no cost to the Town.

b. Joint deflection of mechanical joint and Tyton joint pipe shall be as indicated on Standard Details and the Plans, unless otherwise approved by the Superintendent.

c. Special care shall be taken to ensure that the pipes are well bedded on a solid foundation in accordance with Detail 101.
Any defects due to settlement shall be made good by the Contractor at no expense to the Town. Bell holes shall be dug sufficiently large to ensure the making of proper joints.

d. Springing of pipe to replace any section will not be allowed, except by permission of the Superintendent.

e. Pipe fittings and valves shall be secured in place by concrete foundation or thrust blocks or by strapping as shown on the plans and in accordance with the Standard Details.

B. Joints

1. Mechanical Joints

a. Mechanical joints consist of rubber gaskets, cast iron gland rings, bolts, and hexagonal nuts. Prior to assembling joint, both pipe sections to be in contact with the gasket shall be cleared with a wire brush so as to obtain a clean, smooth surface free of rust and foreign materials.

b. Assemble joints in accordance with AWWA C111 and C600 and as specified herein. Clean with soapy water and lubricate contact surfaces with vegetable oil soap. Slip the gasket over the spigot end into the bell. Center the spigot end in the bell. Complete the joint by alternate tightening of proper number, size and length bolts 180 degrees apart with a torque wrench set between 50 and 60 foot pounds, so that the gland and face of the flange present parallel faces during the procedure. The first bolt to be tightened shall be at the bottom of joint. Second shall be at the top of the joint, etc.

c. Where satisfactory sealing of the joint is not attained at the maximum permissable torque, disassemble, reclean and reassemble the joint with a new gasket.

2. Push-on Joints

a. Push-on joints consist of a circular rubber gasket which fits into a specially designed bell or socket end of the pipe and over the spigot end of the pipe using the manufacturer's recommended lubricant. The

or grind the spigot on field cut pipe lengths to re-. semble the pipe as manufactured so that the spigot end will slip into the socket intact without hindrance or gasket damage. Place an indentifying mark on pipe that is not furnished with a depth mark on the spigot to show the depth of the socket.

b. Assemble joints in accordance with AWWA C600 and as specified herein. Clean the inside of the socket and outside of the spigot and the pipes to be jointed to obtain clean, smooth surfaces free of foreign materials. Apply a thin film of gasket lubricant furnished by the joint manufacturer to the inside surface of the gasket and to the outside surface of the spigot. Enter the spigot into the socket. Complete the joint by forcing the spigot into the socket up to the depth mark, using equipment designed for the purpose.

C. Fittings and Valves

1. Install fittings, and valves where indicated on the plans. Set fittings and valves and join to pipe as hereinbefore specified. Where valves occur on the end of a pipeline, place a cast iron plug or blind flange and secure in the exposed bell before backfilling the trench.

2. Provide a valve box and extension stem where required for the following: nut operated valves; valves on which the operating mechanism is enclosed in a grease case; valves 16 inch and larger in diameter; valves with exposed gearing or operating mechanism; air valves.

3. Set valve box at right angle to the water main, centered and plumb over the operating nut of the valve extension stem with nut from three to four feet below top of cover with the box cover flush with the surface of the finished grade, or set to the elevation shown on the drawings. Support as required to maintain nut in position. Before installation, ascertain that valves are in proper working order. If valves are not operating properly, notify the Superintendent immediately. Backfill and compact under and around valve boxes to insure no vertical loads are transmitted to the valve operators.. The flange at the bottom of the bottom section shall rest upon bricks as shown on the Standard Detail.

D. Hydrants

1. Install fire hydrants where indicated on the Plans in accordance with the Standard Details. Set plumb at the elevation directed by the Superintendent. Place the steamer

outlet normal to the street line. Strap fire hydrant to main as shown on the Standard Details.

2. The hydrant shall be firmly set on a solid concrete block and a minimum of 1/3 cubic yard of granular bedding of SHA graduation #8 which shall extend to a point approximately 4 inches above the waste opening in accordance with the Standard Details.

3. Lay fire hydrant connections level, in the manner specified herinbefore for laying pipe.

E. Water House Connections

1. Provide water house connections from the water mains to property lines with one continuous piece of "K" copper pipe at the elevations indicated on the Plans, Standard Details, or directed by the Superintendent. Install corporation stops, curb stops and/or meter vaults where indicated. Mark the location of the end of the water connection pipe at the property line with a 2 x 4 timber, painted green, placed vertically from the bottom of the trench and extending two feet above grade.

2. Except where otherwise specified herein tapping of the water main and insertion of the corporation stops shall be performed by qualified personnel. No tapping for these services shall be performed prior to the testing and acceptance of the main.

   a. Provide a service saddle where tapping a three or four inch cast iron or ductile iron water pipe for a one or one and one-half inch corporation stop. Maintain a minimum of 18 inches from tap to the bell end of the pipe. After making the connection and completing the installation, open and leave open the corporation stop.

   b. Do not tap dry unless directed by the Superintendent. If so directed, make the tap as specified herein and leave the trench open at the tap until the water main has been placed in service and the taps have been inspected.

3. Install house connections with outside meters per Standard Details.

F. Corporation Stop for Chlorination Purposes

1. Provide one-inch corporation stop and coupling in water mains for chlorination purposes where directed by the Superintendent. The corporation stop shall be removed after testing and the contractor shall install a standard corporation stop threaded brass plug per AWWA C800.

G. Valve Vaults and Manholes

1. Provide valve vaults and manholes where indicated on the plans in accordance with Detail 102. Sanitary Sewer Manhole Frame/Cover. Do not complete to final grade until grading is complete and proper alignment is insured. Set frames on grade rings if required as indicated on the Standard Details. Space steps as indicated on the Standard Details and the Plans.

H. Buttresses, Anchorage & Harnessing

1. Provide buttresses, anchorages and harnessing where indicated on the plans or directed by the Superintendent in accordance with the Standard Details. The Superintendent will inspect and approve excavations before buttresses and anchorages are placed. The entire face of the excavation against which butresses will bear shall be firm bearing, flat and at proper angle to the pipe connections. The concrete shall be cured seven days between placing concrete and pressurizing mains.

I. Connections to Existing Lines

1. Before the start of construction, dig test pits on all connections to existing work. The Superintendent will examine the test pits and establish line and grade and determine material required at connections.

2. Notify the Superintendent at least three working days prior to proposed connection construction. Make connections at such time and in such manner as the Superintendent directs.

3. The Commissioners of Thurmont will notify the consumers and operate or have DPW personnel operate all valves necessary to shut off the mains. The Commissioners of Thurmont will make every reasonable effort to have tight shut offs, but does not warrant that the mains will be dry. Complete the connections with the greatest possible speed.

4. Certain information is shown on the drawings relative to existing pipe and other construction. This information was transferred from existing records and is deemed to be reliable but the Town does not warrant or guarantee that either the locations, the dimensions or the type of material are exactly as shown.

5. Water House Connection Renewals

a. Unless otherwise directed, utilize existing tap at main water line.

b. Where directed by the Superintendent, abandon the existing tap and retap the main water line pipe.

c. Furnishing material for and tapping main line water pipe shall be performed by experienced personnel.

Main Dia	4"	6"	8"	10"	12"
A (min)	4'-10"	5'-1"	5'-6"	5'-9"	6'-0"

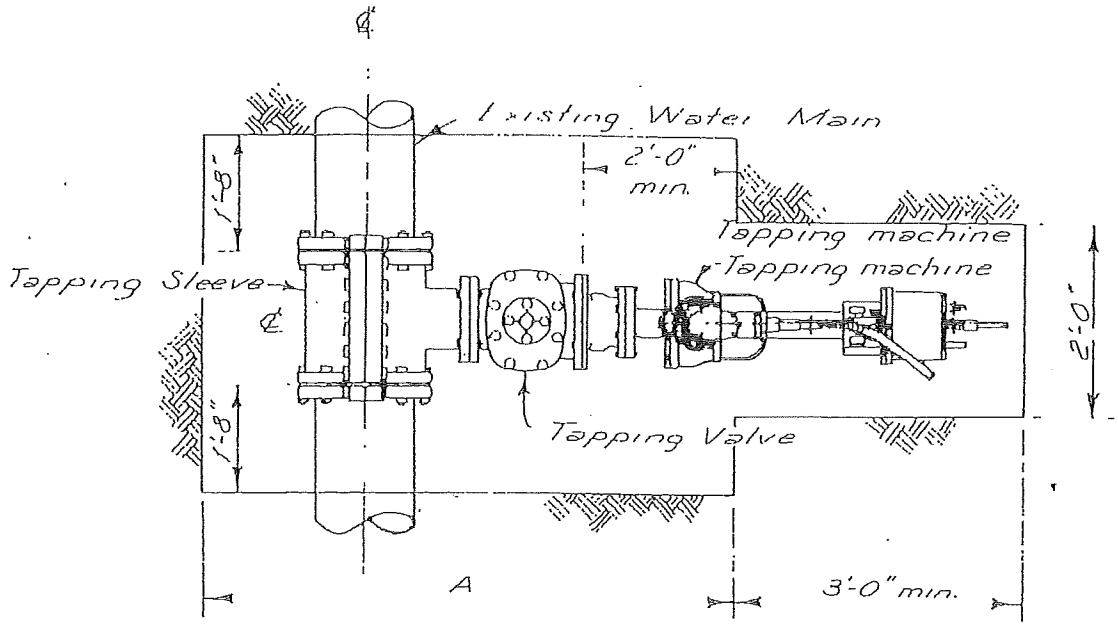

Plan

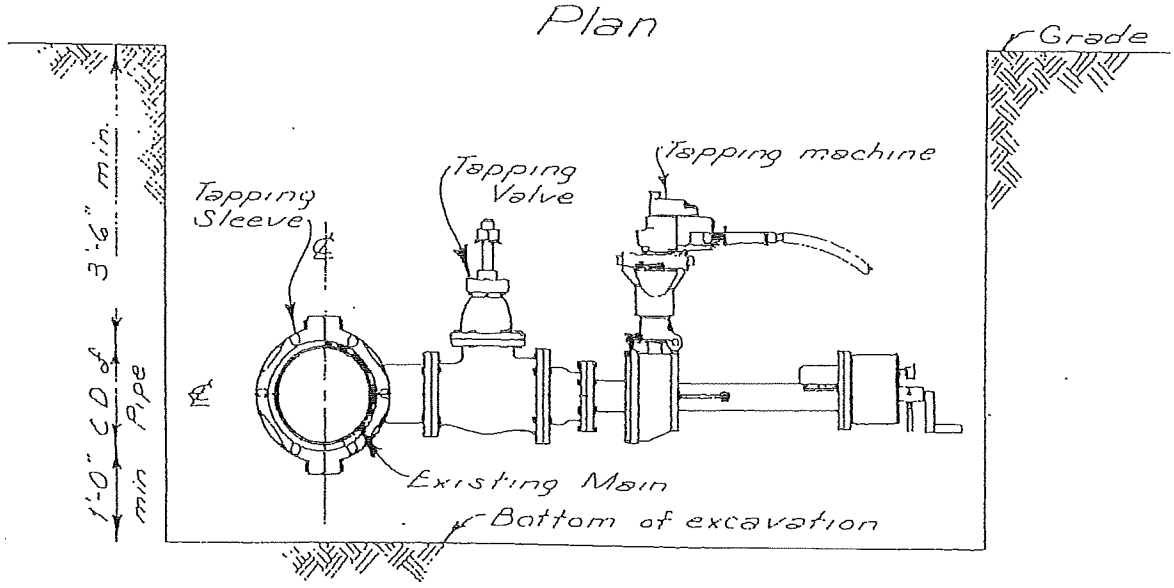

After tapping, buttress per Detail

Elevation

Not to Scale

ACH

Commissioners of Thurmont	Revisions: Date / Note	Tapping Sleeve and Valve Installation	Detail No. 201
			Date: 6-2-82

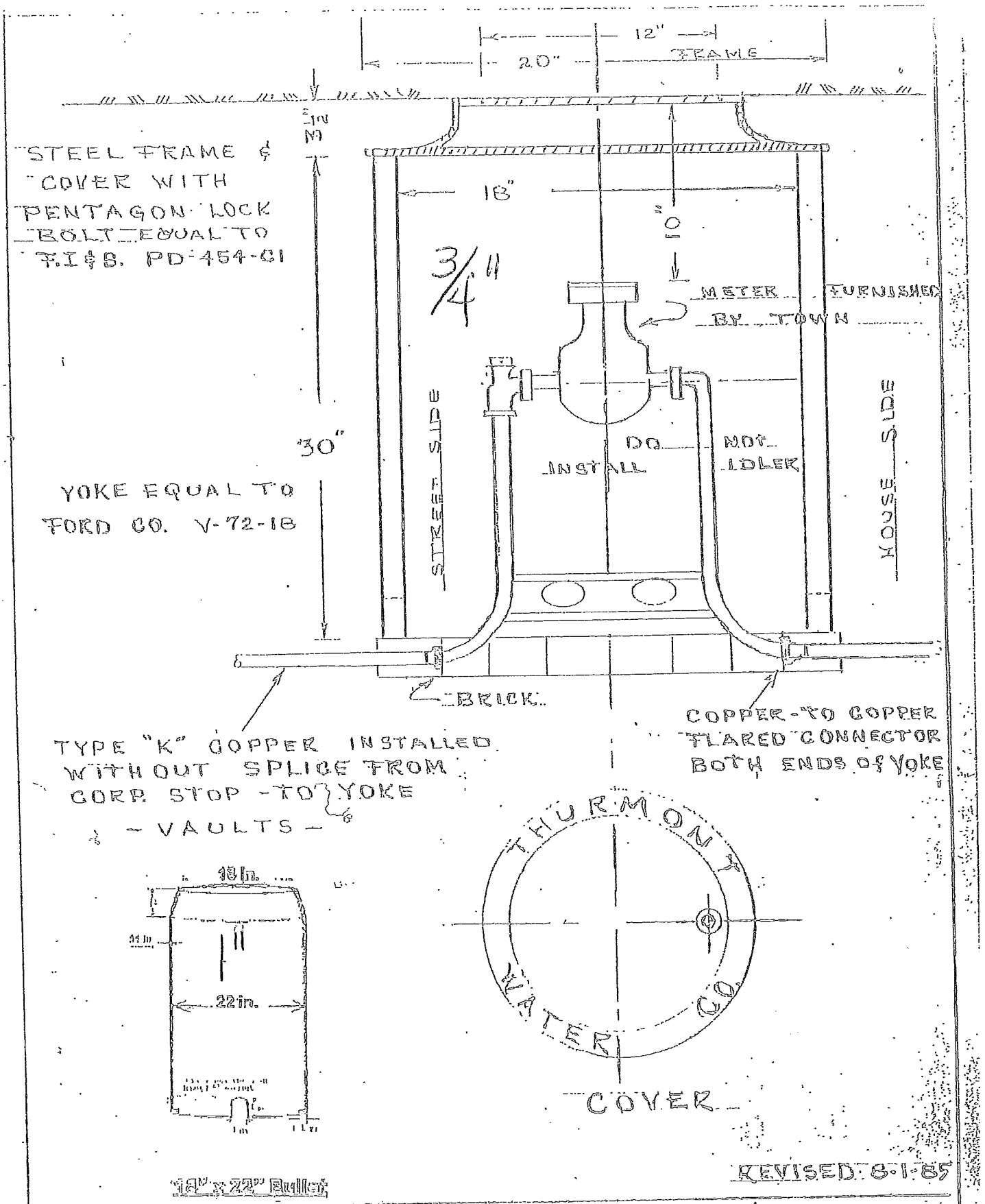

REVISED: 8-1-85

Commissioners of Thurmont	3/4" AND 1" WATER METER SETTING	DETAIL NO. 202 DATE: 6-2-82

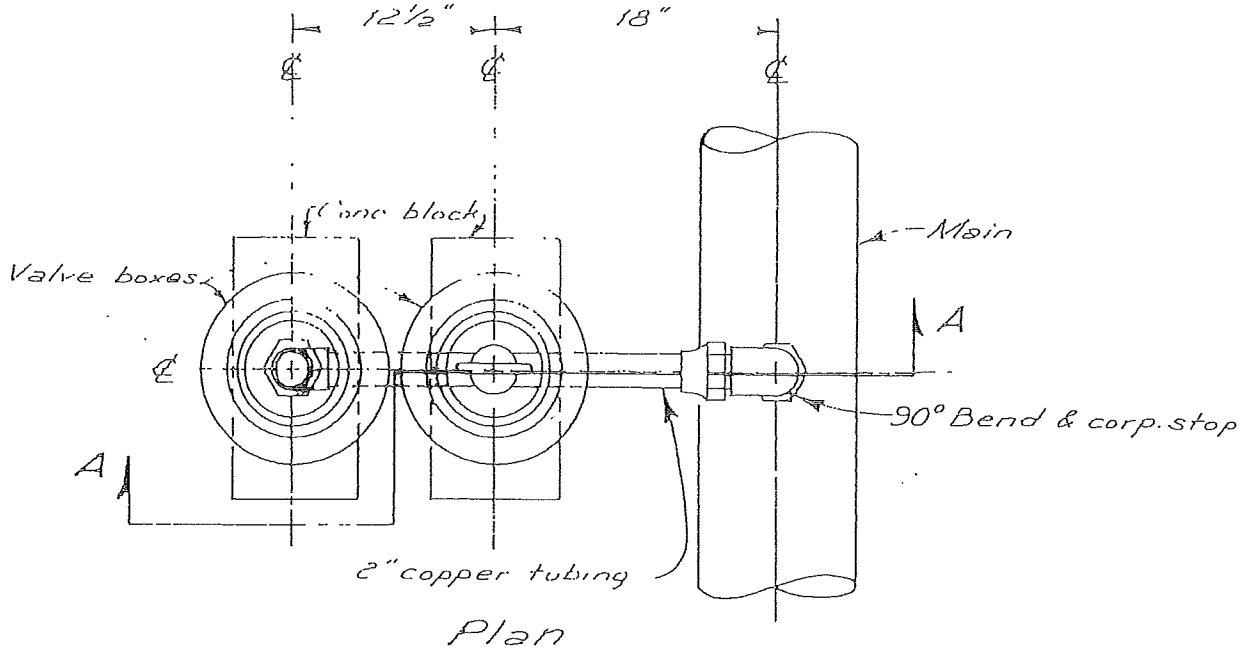

Plan

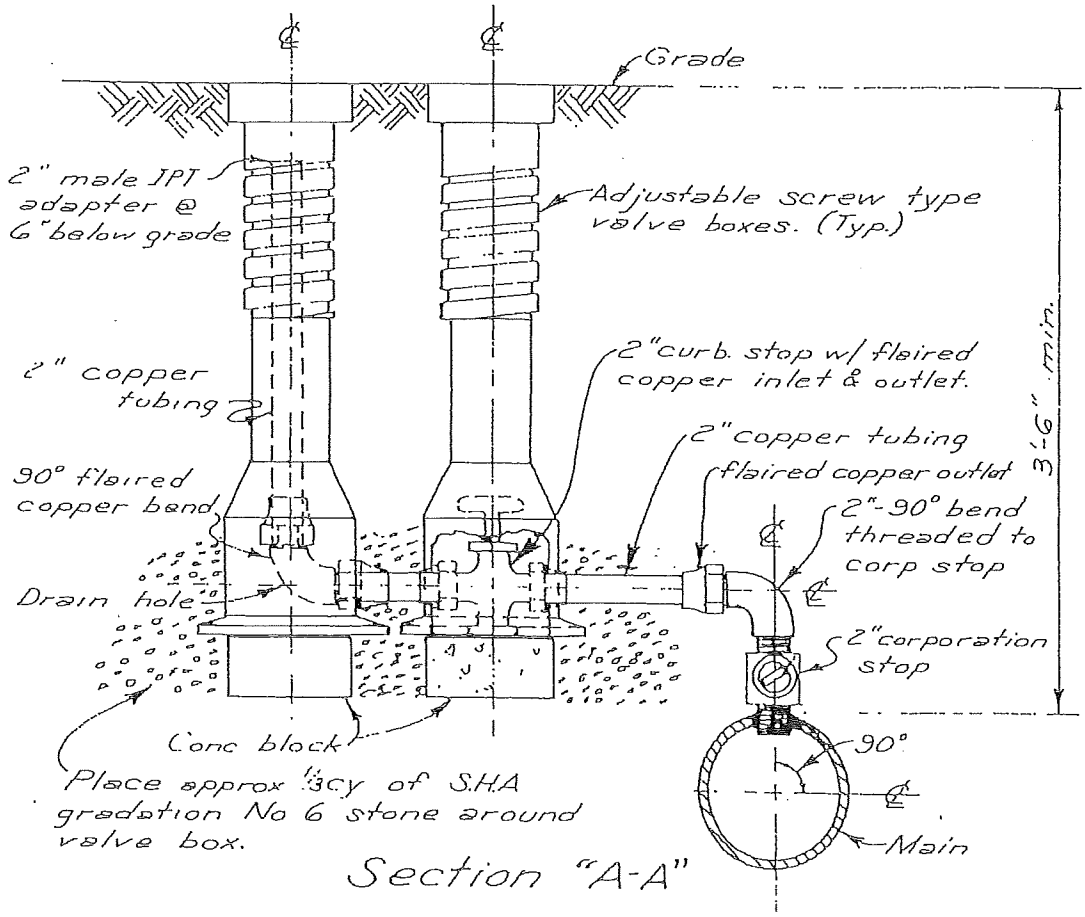

Section "A-A"

KCH

Commissioners of Thurmont	Revisions Date / Note	Manual Air Release Valve	Detail No. 203
			Date: 6-2-82

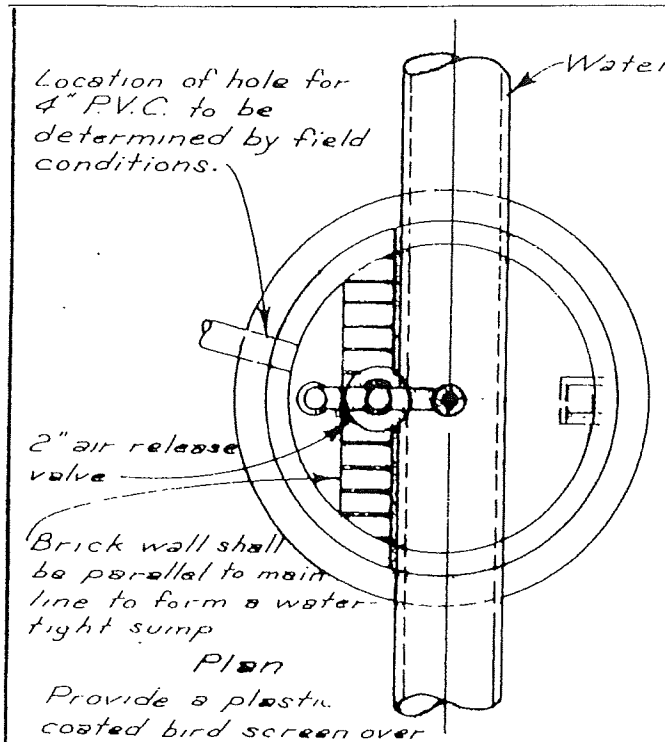

Plan

Provide a plastic coated bird screen over end of pipe.

In developed areas, provide 4" PVC drain @ 0.5% min. slope to storm drain or drainage ditch.

In undeveloped area, extend air release pipe above ground, 1ft. above the 50-yr flood plain @ elevation given on the contract drawings

All fittings between 2" air valve and the main line shall be heavy duty threaded unpolished brass.

Elevation of top of brick wall to be above water table.

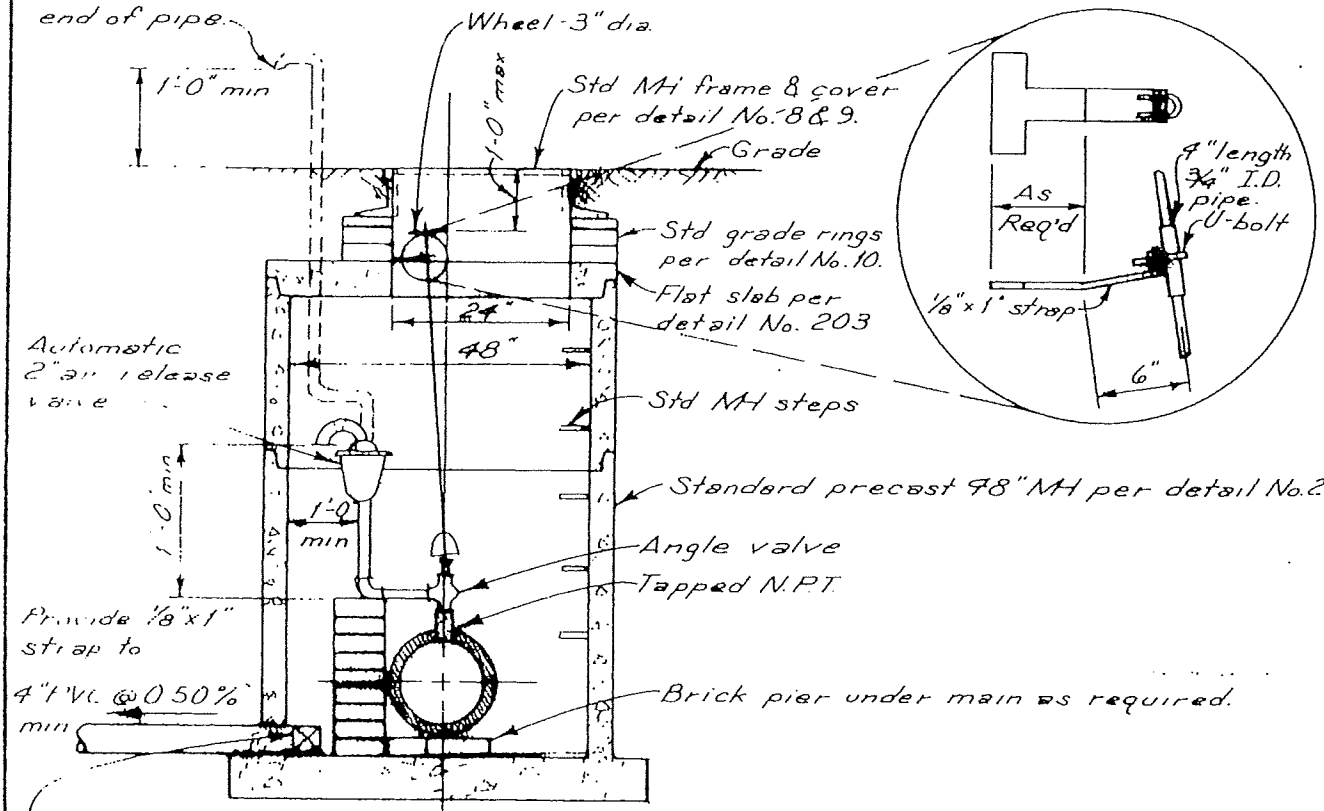

Back water valve shall be connected to 4" PVC pipe inside MH

PVC. pipe to MH connection shall be per Detail No 214

℄ main line shall be off-set from MH ℄ as main line diameter increases to allow for 1'-0" min between 2" pipe and wall of MH.

Section

K.C.H

Commissioners of Thurmont	Revisions: Date / Note	2" Air Valve in MH for 24" & Smaller Water Mains	Detail No. 204
			Date: 6-2-82

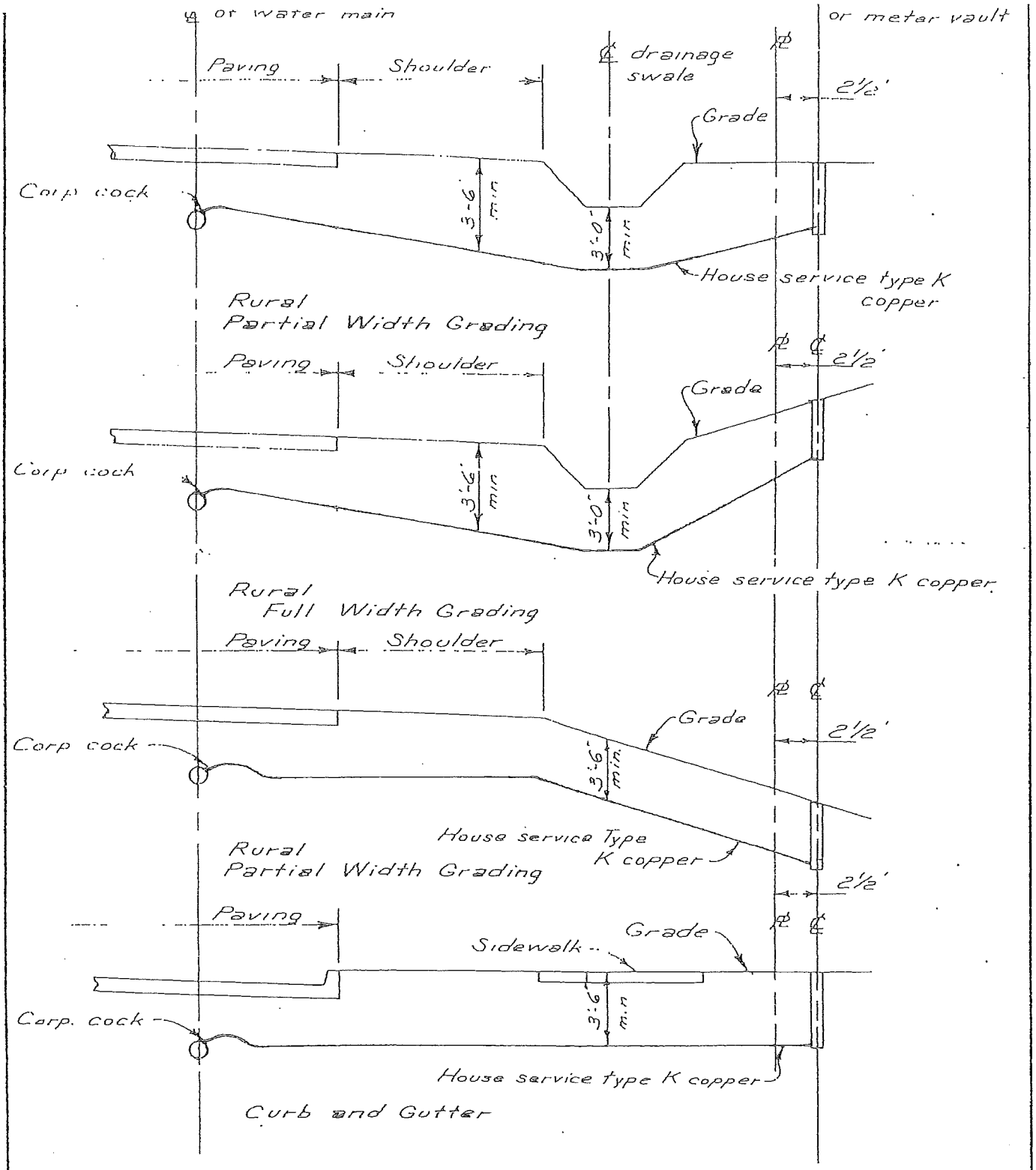

Curb stop or meter vault shall be provided with a plug or cap unless house is connected immediately.

K.C.H.

Commissioners of Thurmont	Revisions Date / Note	¾", 1", 1½", & 2" Water House Connections	Detail No. 205
			Date 6-2-82

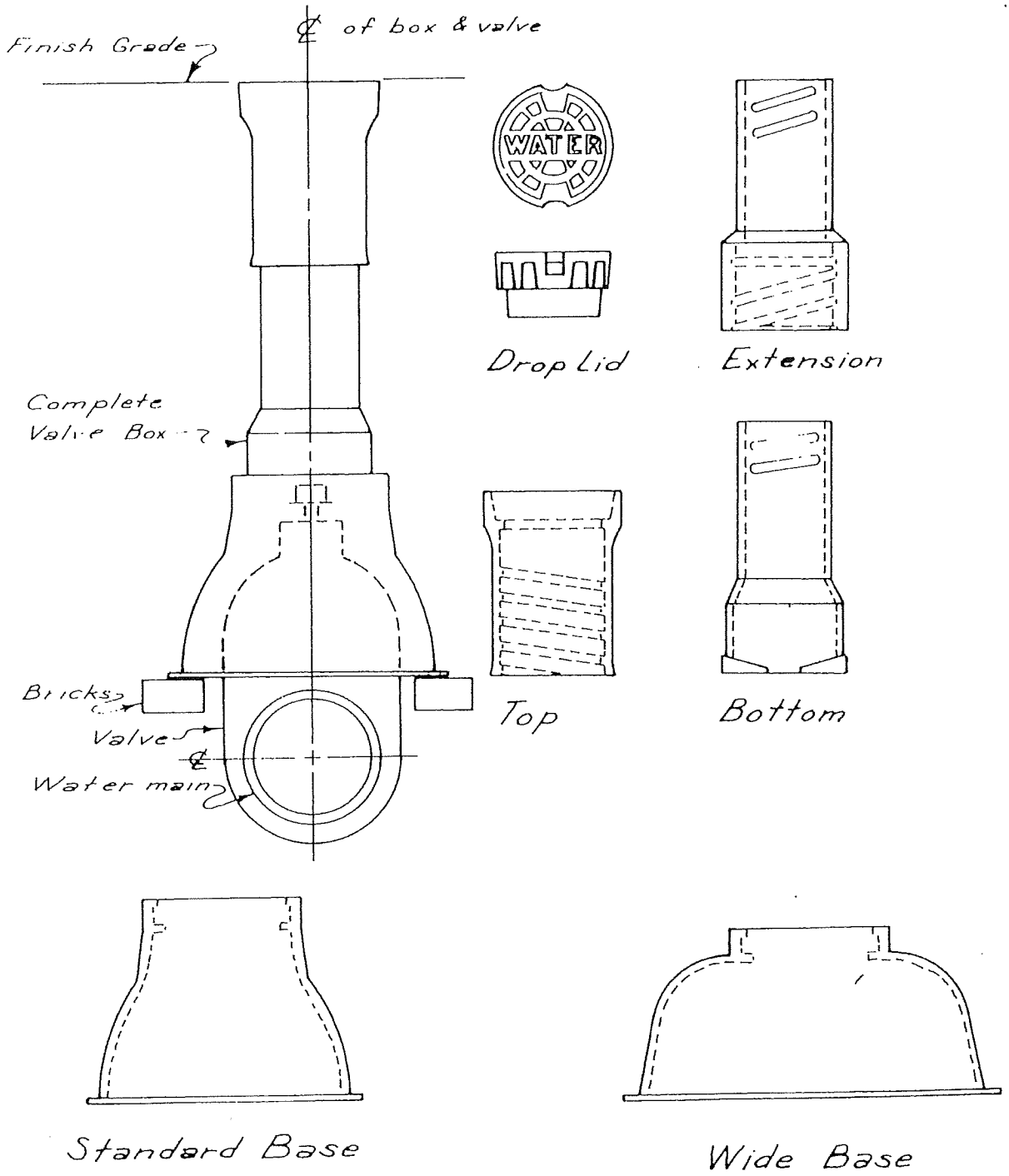

1. Valve box bases shall be sized and installed so that valve box can not transfer loads to valves. Place base on bricks.
2. Valve box shall be adjusted to finished grade to allow future adjustment up or down.
3. Valve boxes shall be cast iron, screw type with 5¼" shaft by Tyler Pipe or equal.

K.C.H.

Commissioners of Thurmont	Revisions: Date / Note	Valve Boxes for Water Mains	Detail No 206
			Date: 6-2-82

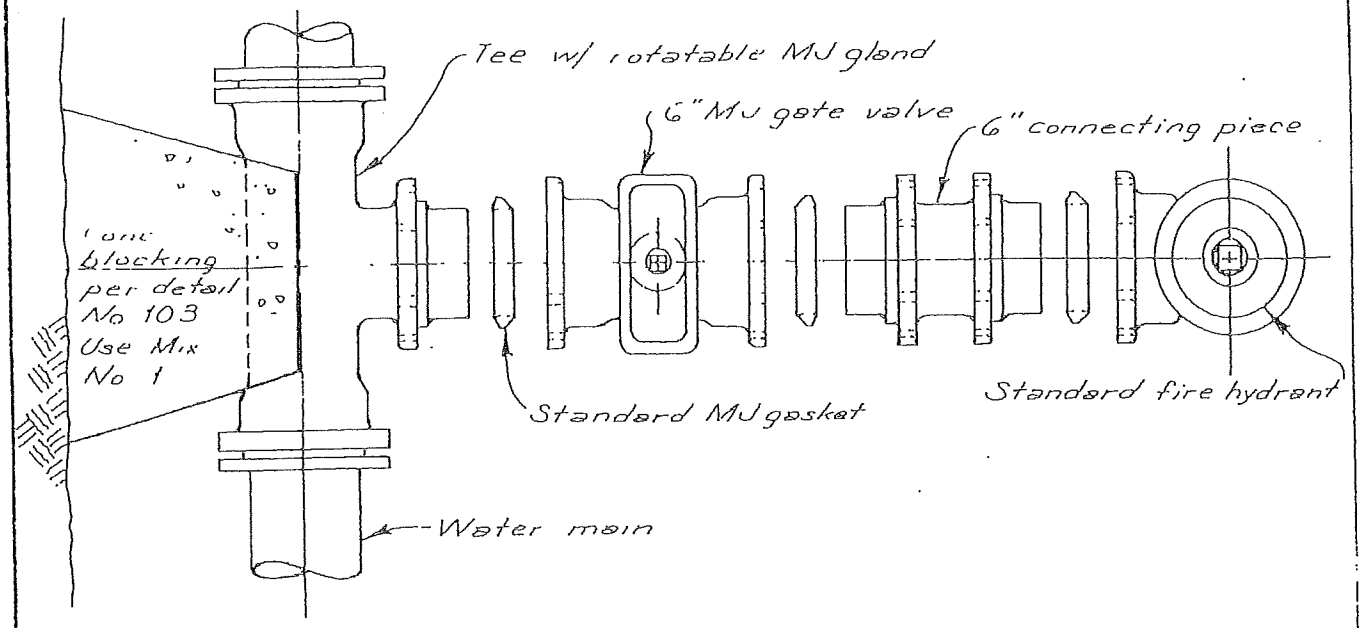

Mechanical joint valve and hydrant tees and connecting pieces shall be used for anchoring mechanical joint valves and hydrants to the pipe main. These hydrant fittings with integrally attached glands shall effectivelly restrain joint from separation. Joint connections shall be made with standard mechanical joint bolts and gaskets. Tie rods are not required. Glands shall rotate on tee branches and one end of connection pieces to facilitate vertical setting of valves and hydrants in sloping terrain. Hydrant tees and connecting pieces may be grey iron or ductile iron and shall meet ANSI A21 10 and A21.11

Commissioners of Thurmont	Revisions: Date / Note	Alternate Method of Installing Fire Hydrants	Detail No 207
			Date: 6-2-82

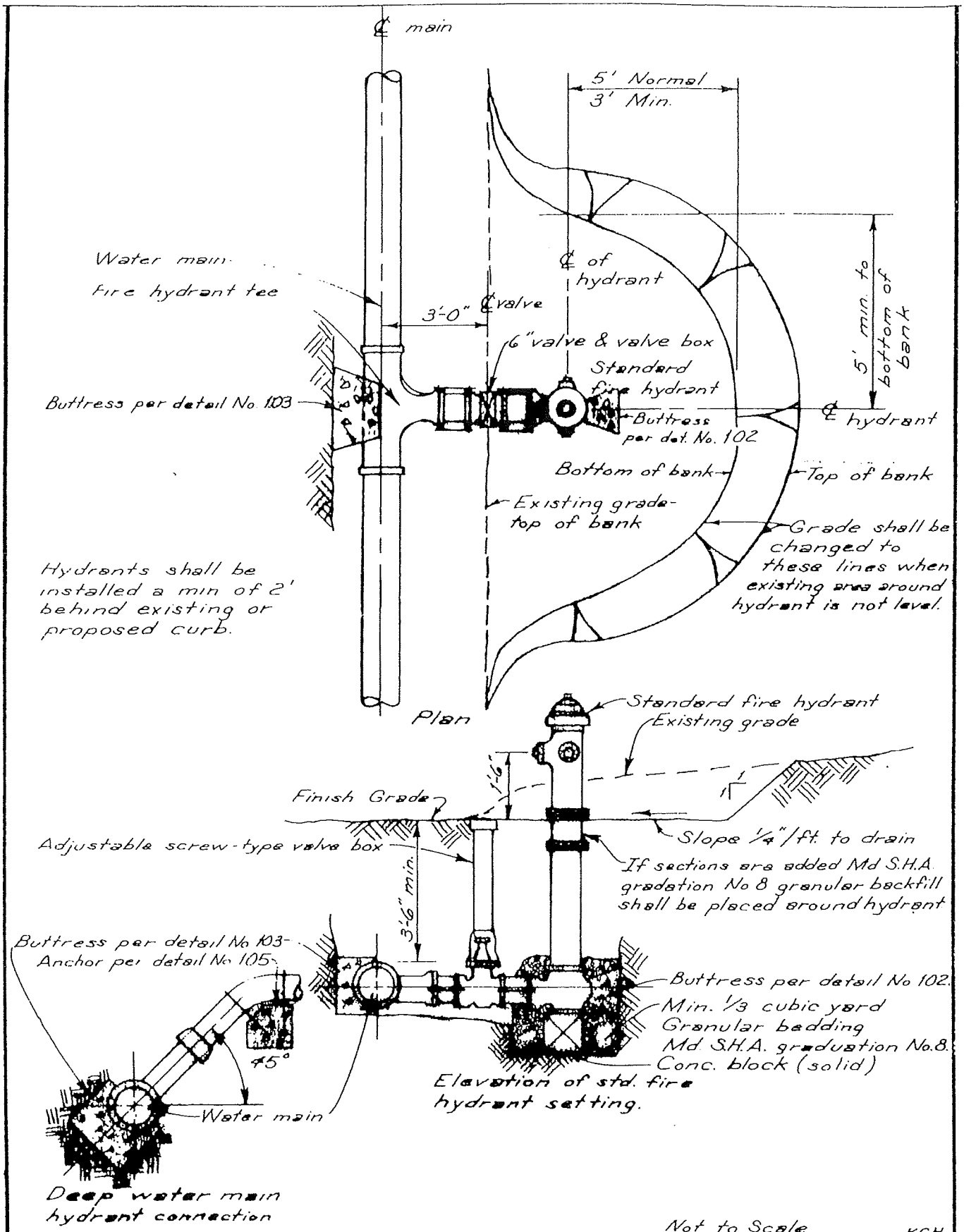

Not to Scale

K.C.H.

Commissioners of Thurmont	Revisions Date / Note	Fire Hydrant Setting and Grading	Detail No. 208
			Date: 6-2-82

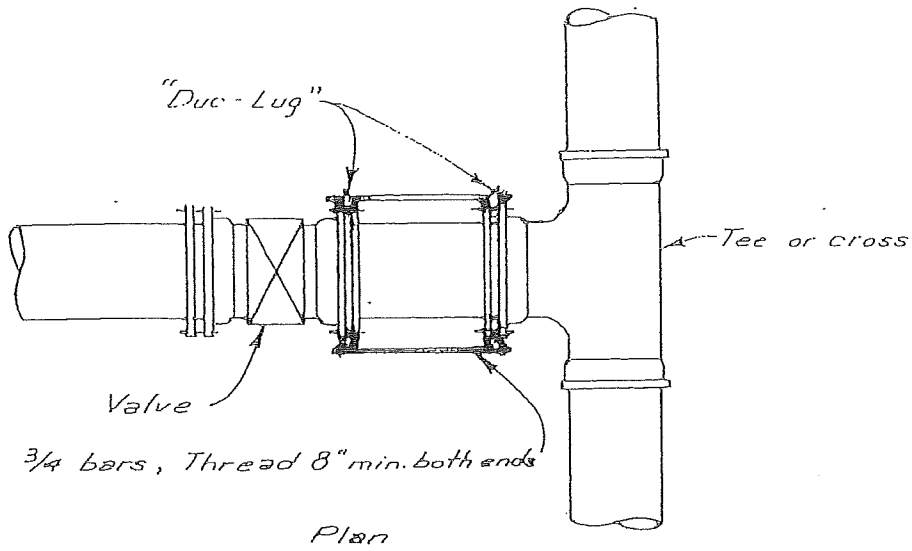

Plan

Valve Size	No. of 3/4 ø bars required	Max Spigot Length
3"	2	27"
4"	2	27"
6"	2	27"
8"	2	27"
10"	4	27"
12"	6	27"
16"	8	36"
20"	12	36"
24"	16	36"
30"	20	36"

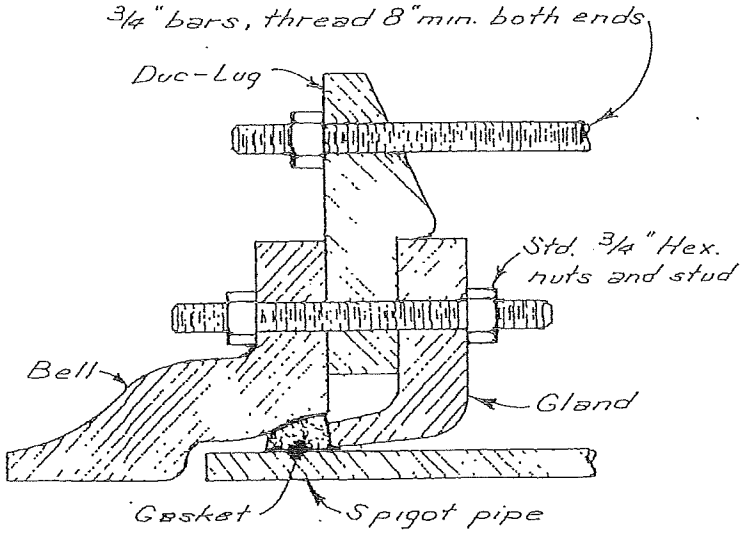

Cross Section of Lug Assembly

Mechanical joint fittings only shall be used.
All steel shall be coated with two coats of bituminous paint, conforming to MIL-P-23236 P, class 2.
If tapping sleeve & valve are used, omit strapping and spigot pipe.
Tie bolts by "Star" are an approved equal to "Duc-Lugs."

KCH

Commissioners of Thurmont	Revisions: Date / Note	Method of Strapping Valve to Tee with "Duc-Lugs"	Detail No. 209
			Date: 6-2-82

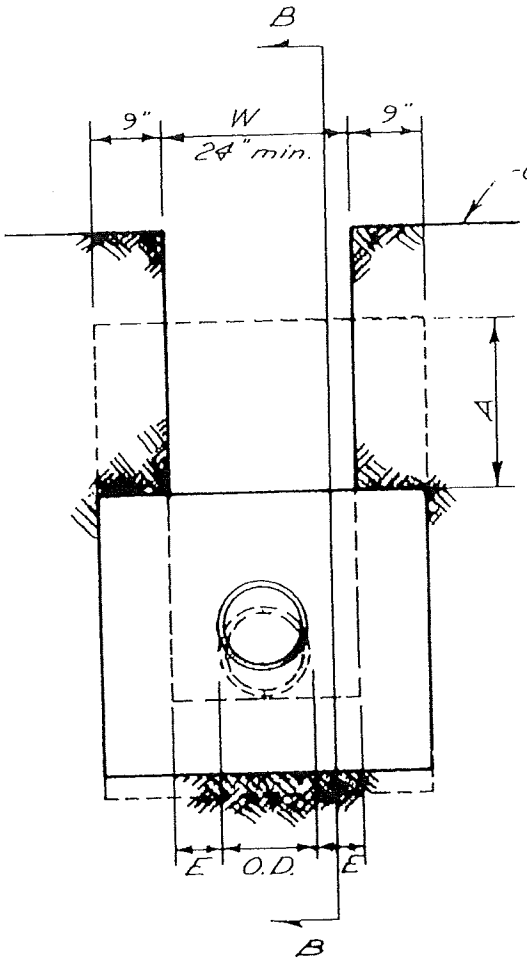

Section "A-A"

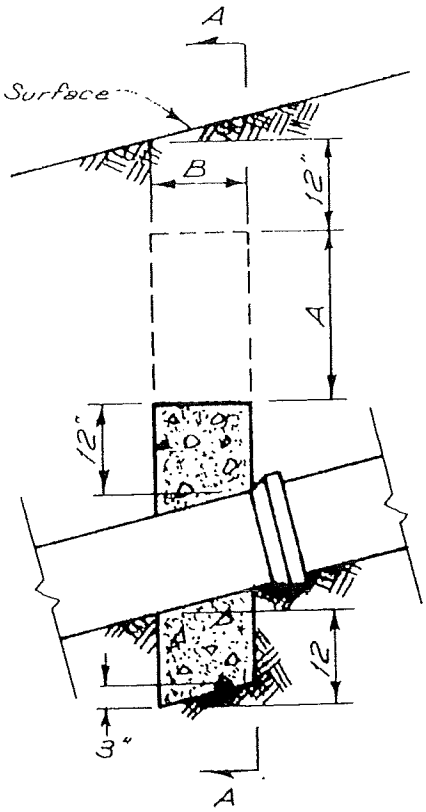

Section "B-B"

A - Extension of anchor to 12" below ground surface, when necessary to prevent washout of backfill by surface water.
B-12" for pipes 10" or less, 18" for pipes 10" to 18" nominal dia.
W- O.D. +2E

1 Provide no anchors on grades less than 20% unless noted.
2 Provide anchors 36' ctr. to ctr. on grades between 20% & 34%.
3 Provide anchors 24' ctr. to ctr. on grades between 34% & 50%.
4 Provide anchors 16' ctr. to ctr. on grades between 50% & 70%.
5 All anchors to be Md. S.H.A. mix no. 1 concrete, placed downgrade of bell, as shown above.

K.C.H.

Commissioners of Thurmont	Revisions Date / Note	Concrete Anchors for Pipe installed on Grades 20% or More	Detail A 210 Date: 6-2-82

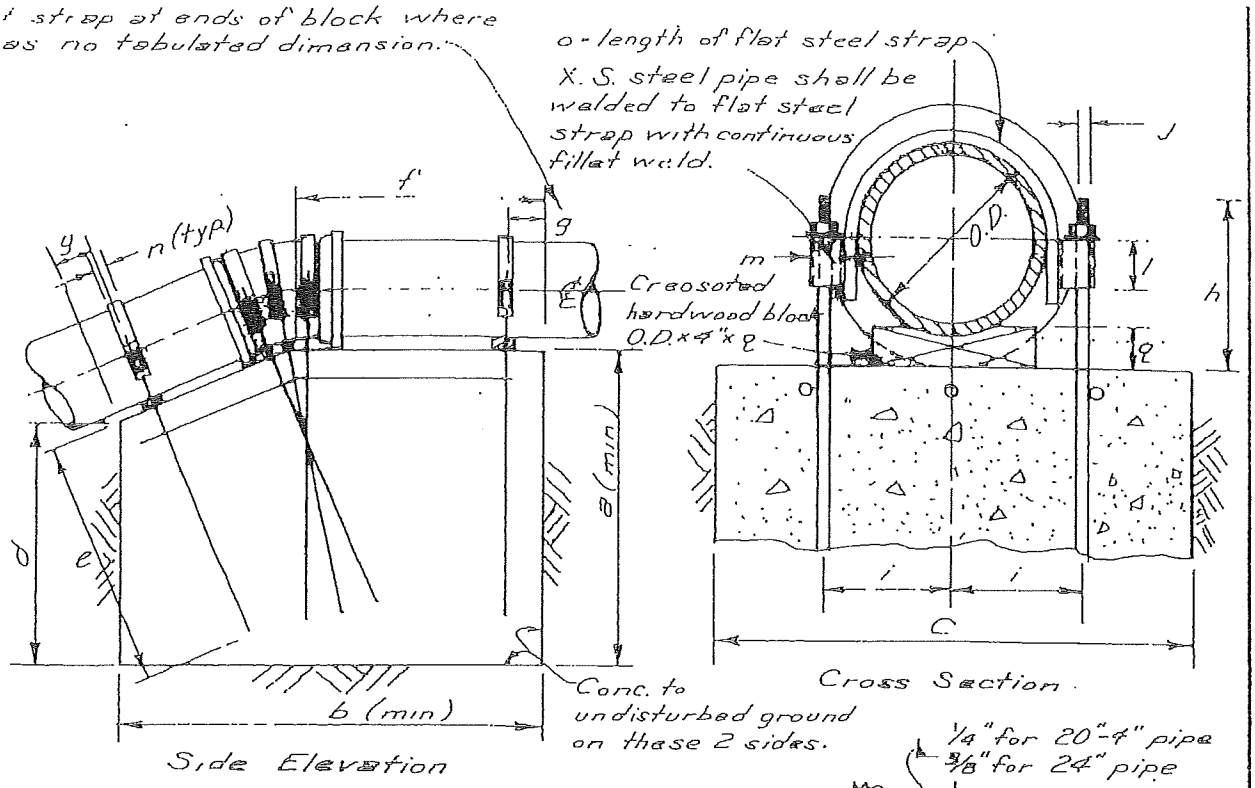

Concrete shall be Md S.H.A. mix No. 1.

Anchor bolts shall have 3" threaded length & std. 90° hook facing center of block, and shall be tied to rebar w/eq. ϕ.

All exposed steel to be painted with 2 coats of bituminous paint conforming to MIL-P-23236 P, class 2.

Bell to rest on screeded upper surfaces of block.

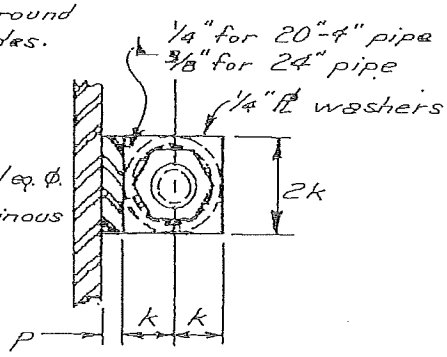

Strap Attachment

KCH

Dimensions for Vertical Bend Anchorages - In Inches

Bend	1/32 -- 11 1/4°								1/16 - 22 1/2°								1/8 - 45°							
Size ϕ	4	6	8	10	12	16	20	24	4	6	8	10	12	16	20	24	4	6	8	10	12	16	20	24
a	12	16	18	22	26	34	36	42	15	20	26	36	36	42	48	56	18	27	45	48	60	66	72	78
b	12	18	20	26	34	44	50	54	18	22	33	44	50	72	80	90	21	39	51	63	75	84	99	111
c	15	18	28	30	30	34	42	50	18	30	30	30	36	39	48	54	30	30	30	36	36	51	60	72
d	11	14 1/4	16	19 1/4	22 3/4	30	31 1/8	37	11 1/8	16	19 3/8	27 1/2	26 1/2	28 1/4	38 1/2	39	9	13	28	28	31	37	37	40
e	8	12	14	18	22	28	30	36	11	16	22	30	30	36	42	50	14	23	39	42	54	60	66	70
f	6 1/3	9 1/4	10	14	18	24	27	29	9 1/2	18	22	24	27	39	43	49	12	25	34	43	46	55	64	78
g	-	-	-	-	-	6	6	6			-	-	6	6	6	6	-	-	-	-	6	6	6	6
h	6 1/3	7 1/8	8 1/4	9 1/8	10 3/4	13	15 1/4	18	6 1/2	7 1/8	8 1/4	9 1/2	10 3/4	15	15 1/8	18	6 1/4	7 1/8	8 1/4	9 1/4	10 3/4	13 1/4	15 1/4	18
i	3 1/2	4 3/4	5 11/16	6 3/4	7 3/4	9 3/4	12 3/4	14 1/4	3 1/2	4 3/4	5 11/16	6 3/4	7 3/4	9 3/4	12 3/4	14 1/4	3 1/2	4 3/4	5 11/16	6 3/4	7 3/4	9 3/4	10 3/4	13 3/4
j	3/4	3/4	3/4	3/4	3/4	3/4	3/4	1	3/4	3/4	3/4	3/4	3/4	3/4	3/4	1	3/4	3/4	3/4	3/4	3/4	1	1	1 1/4
k	3/4	3/4	3/4	3/4	3/4	3/4	3/4	1 1/4	3/4	3/4	3/4	3/4	3/4	3/4	7/8	15/16	3/4	3/4	3/4	3/4	3/4	3/4	3/4	1 1/4
l	1	1	1	1	1 1/4	2	3	4	1	1	1 1/4	2	1 1/4	2 1/4	3 1/4	5	1	1 1/4	2 1/4	2	2 1/4	4 1/4	4 1/4	6
m	1	1	1	1	1	1	1 1/4	1 1/4	1	1	1	1	1	1	1 1/4	1 1/4	1	1	1	1	1	1 1/4	1 1/4	1 1/4
n	1 1/4	1 1/4	1 1/4	1 1/4	1 1/4	2	2	2 1/4	1 1/4	1 1/4	1 1/4	1 1/4	2	2	2	2 1/4	1 1/4	1 1/4	2	2	2	2 1/4	2 1/4	2 1/4
o	12 1/4	15 3/4	19	22 1/4	26 1/4	33 3/4	42 1/4	51 1/8	12 1/4	15 3/4	19 3/8	24	26 1/8	34	43	53	14 1/4	16 1/4	22	24	29	38	42	55
p	1/4	1/4	1/4	1/4	1/4	1/4	3/8	3/8	1/4	1/4	1/4	1/4	1/4	1/4	3/8	3/8	1/4	1/4	1/4	1/4	3/8	3/8	1/2	1/2
q	1	1	1	1 1/4	1 3/8	1 3/4	1 7/8	1 7/8	1	1	1	1 1/4	1 1/4	1 3/4	1 7/8	1 7/8	1	1	1	1 1/4	1 3/8	1 3/4	1 7/8	1 7/8

Commissioners of Thurmont	Revisions: Date / Note	Anchors for 11 1/4°, 22 1/2° & 45° Upper Vertical Bends	Detail No. 211
			Date: 6-2-82

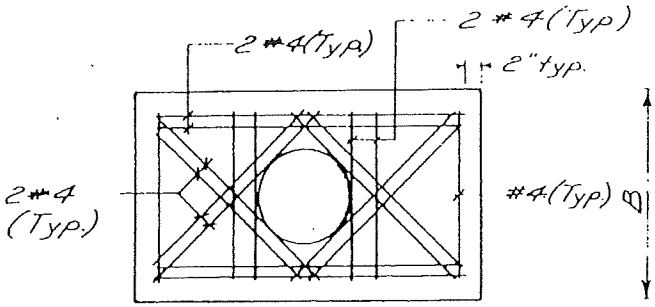

Front Elevation for 3" & 4" Pipes

Min. clr. shall be 1" from pipe to reinforcing steel.

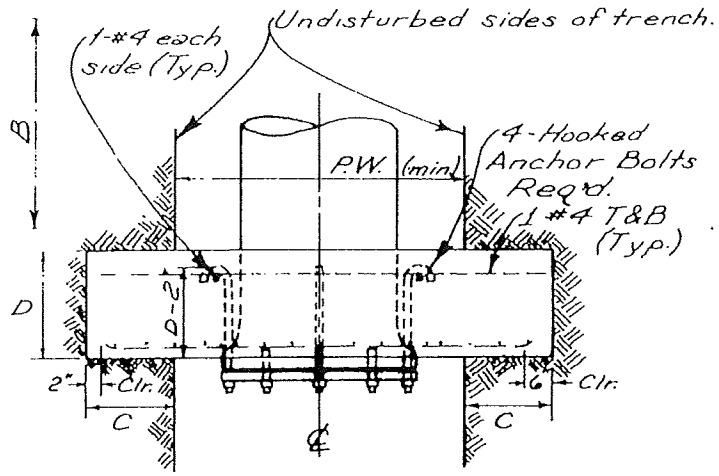

Complete trench in front of plug shall be backfilled and compacted per the General Cond and Std. Specs. prior to testing.

Plan for All Pipes

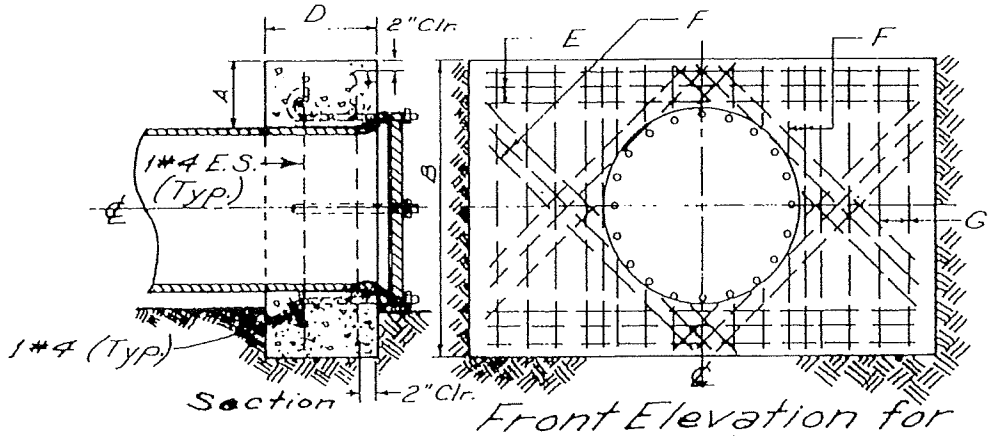

Front Elevation for 6" to 12" Pipes

Anchor Dimensions					Steel - Size & Spacing		
Pipe Size	A	B	C	D	E	F	G
3"	4"	1'-0"	6"	12"	—	—	—
4"	4"	1'-0"	9"	12"	—	—	—
6"	6"	1'-6"	1'-0"	12"	2-#4	2-#4	#4@3"
8"	1'-0"	2'-9"	1'-0"	1'-6"	2-#4	2-#4	#4@3"
10"	1'-0"	3'-3"	1'-3"	1'-6"	3-#4	2-#4	#4@3"
12"	1'-0"	3'-9"	1'-6"	1'-6"	4-#4	2-#4	#4@3"

1. Conc. to have a 28-day compressive strength of 3,000 p.s.i. prior to testing.
2. Reinforcing Steel to be A.S.T.M. A-615 Grade 40 and/or Grade 60.
3. Anchor Bolts to have a minimum $F_y = 36,000$ psi.
4. If trench width exceeds P.W. by more than 25% anchor wall design must be verified for structural adequacy.
5. Pipe test pressure = 150 p.s.i.

K.C.H.

Commissioners of Thurmont	Revisions: Date / Note	Anchors for Plugs	Detail No. 212
			Date: 6-2-82

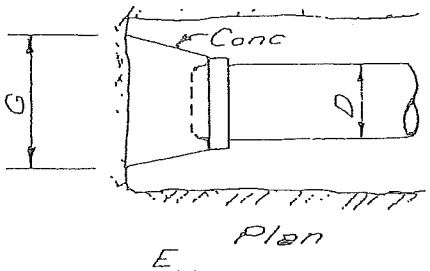

Buttress for Caps										
D	3"	4"	6"	8"	10"	12"	16"	20"	24"	30"
E	7"	7"	6"	8"	8"	10"	1'-0"	1'-4"	1'-8"	2'-0"
F	14"	14"	1'-0"	1'-4"	1'-8"	2'-0"	2'-8"	3'-3"	4'-0"	4'-9"
G	12"	12"	1'-5"	1'-11"	2'-5"	2'-10"	3'-9"	4'-9"	5'-8"	7'-6"

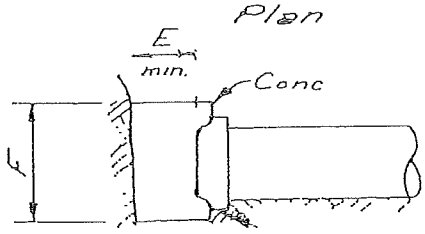

Section

Place polyethylene sheet between cap & conc

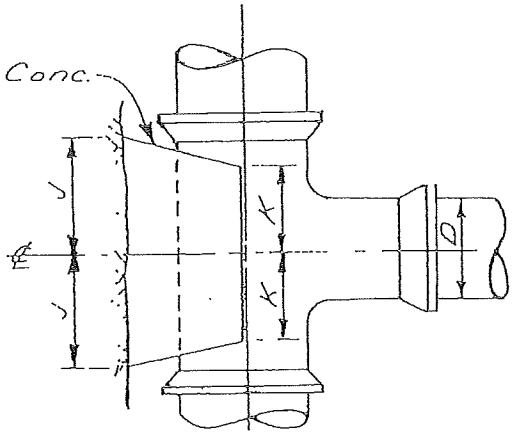

Buttress for Tees										
D	3"	4"	6"	8"	10"	12"	16"	20"	24"	30"
H	7"	7"	8"	9"	10"	1'-0"	1'-4"	1'-8"	2'-2"	2'-8"
I	7"	7"	10"	1'-1"	1'-4"	1'-7"	2'-2"	2'-8"	3'-2"	3'-8"
J	6"	6"	6"	8"	1'-1"	1'-1"	1'-5"	1'-9"	2'-1"	2'-6"
K	4"	4"	6"	7"	8"	9"	10"	1'-2"	1'-4"	1'-6"

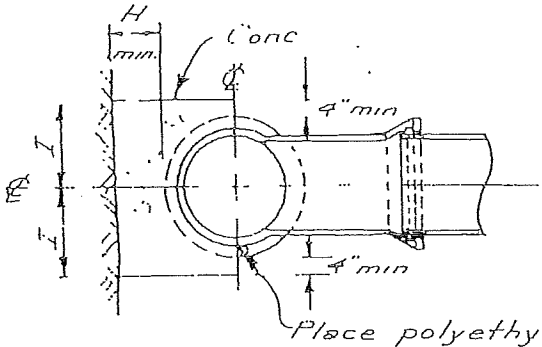

Place polyethylene sheet between tee & conc.

Section

1. All concrete shall be Mix No. 1.
2. Buttress dimensions shown are based upon soil bearing pressure of 3,000 p.s.f. and static water pressure of 150 p.s.i. Where pressure exceeds 150 psi or where soil bearing pressure is less than 3,000 p.s.f. special buttress design is required.
3. For caps on mains where rock has been excavated ahead of pipe laying, use Detail No 104

ACH

Commissioners of Thurmont	Revisions: Date / Note	Buttresses for Caps and Tees on Water Mains	Detail No. 213
			Date: 6-2-82

Mechanical Joint Pipe				
Nominal Pipe Size	Deflection-Inches		Minimum Radius-Feet	
	18 ft. length	20 ft. length	18 ft. length	20 ft. length
4	31	35	125	140
6	27	30	145	160
8	20	22	195	220
10	20	22	195	220
12	20	22	195	220
16	13.5	15	285	320
18	11	12	340	380
20	11	12	340	380
24	9	10	450	500

Tyton Joint Pipe				
Nominal Pipe Size	Deflection-Inches		Minimum Radius-Feet	
	18 ft. length	20 ft. length	18 ft. length	20 ft. length
4	19	21	205	230
6	19	21	205	230
8	19	21	205	230
10	19	21	205	230
12	19	21	205	230
16	11	12	340	380
18	11	12	340	380
20	11	12	340	380
24	11	12	340	380

The above charts are in accordance with AWWA C-600.

Commissioners of Thurmont	Revisions		Curvature of Water Mains	Detail No 214
	Date	Note		Date: 6-2-82

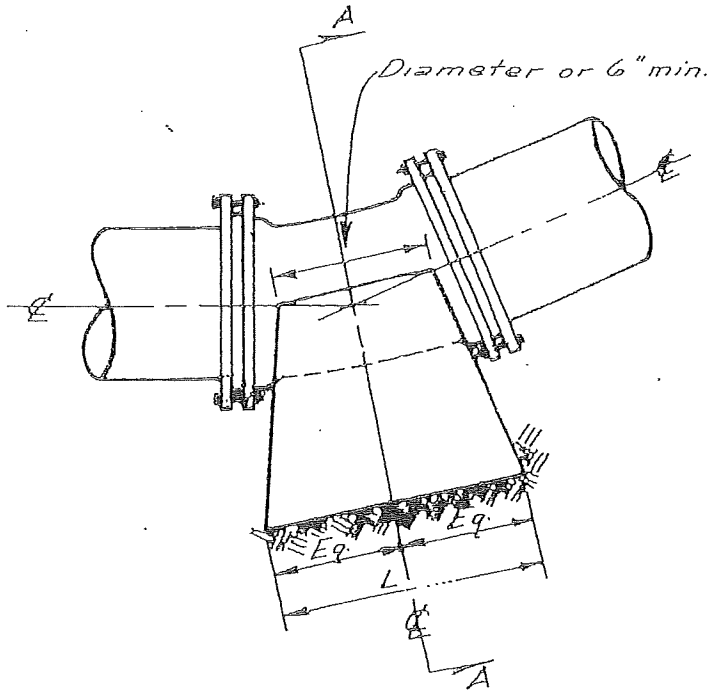

Elevation or Plan

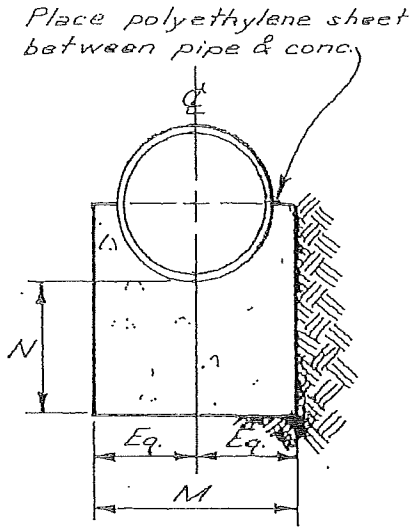

Section "A-A"

Buttress dimensions											
Bend		Size									
		3"	4"	6"	8"	10"	12"	16"	20"	24"	30"
11¼°	L	6"	6"	6"	8"	8"	8"	1'-1"	1'-5"	1'-10"	2'-8"
	M	1'-0"	1'-0"	1'-2"	1'-4"	1'-6"	2'-0"	2'-4"	2'-8"	3'-0"	3'-4"
1/32	N	8"	8"	8"	8"	8"	8"	9"	10"	12"	12"
22½°	L	6"	8"	10"	11"	1'-3"	1'-4"	2'-1"	2'-9"	3'-7"	5'-3"
	M	1'-0"	1'-0"	1'-2"	1'-4"	1'-6"	2'-0"	2'-4"	2'-8"	3'-0"	3'-2"
1/16	N	8"	8"	8"	8"	9"	9"	12"	1'-2"	1'-4"	1'-6"
45°	L	10"	1'-0"	1'-2"	1'-9"	2'-5"	2'-8"	4'-0"	5'-6"	6'-0"	8'-2"
	M	1'-0	1'-0"	1'-2"	1'-4"	1'-6"	2'-0"	2'-4"	2'-8"	3'-6"	4'-0"
1/8	N	8"	8"	8"	8"	12"	1'-2"	1'-6"	2'-0"	2'-6"	3'-0"
90°	L	1'-0"	1'-4"	2'-0"	2'-8"	3'-4"	3'-8"	5'-6"	6'-8"	8'-0"	9'-8"
	M	9"	10"	12"	1'-4"	1'-9"	2'-3"	2'-8"	3'-6"	4'-0"	4'-7"
1/4	N	1'-8"	1'-8"	1'-8"	1'-8"	1'-8"	1'-8"	2'-0"	2'-3"	2'-9"	3'-5"

All concrete to be Md. S.H.A. mix No. 1.
All bearing surfaces shall be placed against undisturbed ground with a min. soil bearing pressure of 3,000 lbs. per s.f.

These buttresses shall be used for horizontal and vertical bends.

K.C.H.

Commissioners of Thurmont	Revisions Date	Revisions Note	Buttresses for use at Horizontal and Vertical Bends	Detail No. 215
				Date: 6-2-82

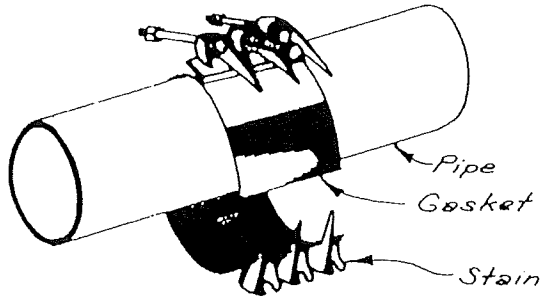

Clean pipe and mark for position where repair clamp is to be installed for centering over break
Lubricate pipe with soap solution.
Center clamp over damaged area.

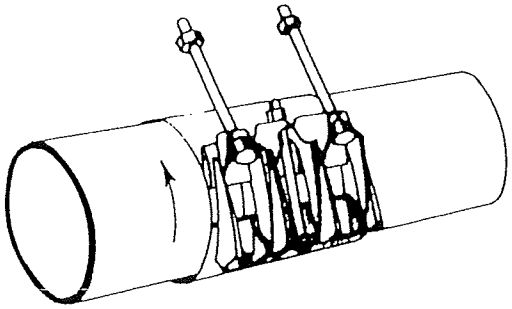

Tuck tapered gasket flap in place and mesh lug fingers. Then engage center bolt and tighten finger tight.

Rotate clamp on pipe in the direction indicated by arrow to seat gasket flap smoothly on the pipe.

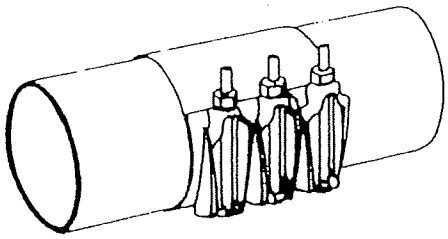

Engage remaining bolts and tighten all evenly with a torque wrench. All 5/8" bolts shall be torqued to 60-65 foot lb. and all 3/4" bolts shall be torqued to 80-85 foot lb.
On multi-band units, equalize gaps between bands.

Contractor shall provide Rockwell full circle repair clamp Nos. 226 or 228 or approved equal at no extra cost to Frederick County.

Commissioners of Thurmont	Revisions Date / Note	Installation of Full Circle Repair Clamp	Detail No 216
			Date: 6-2-82

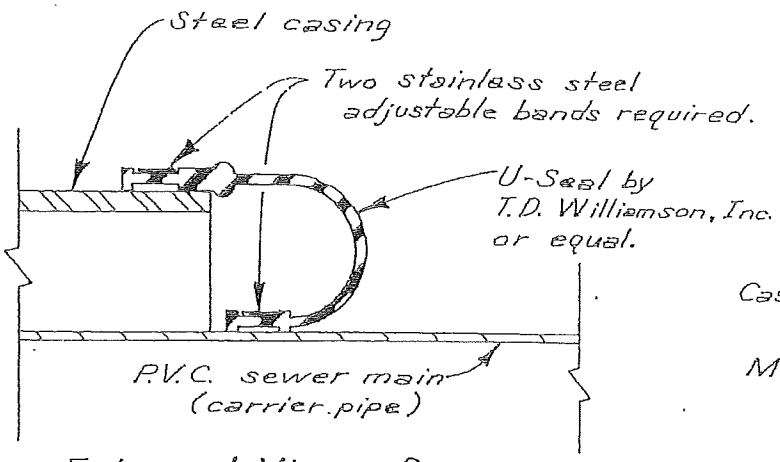

Enlarged View of End Seal Installation

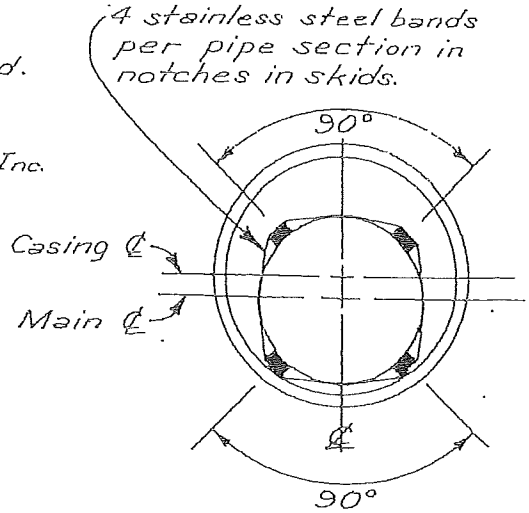

Section "A-A"

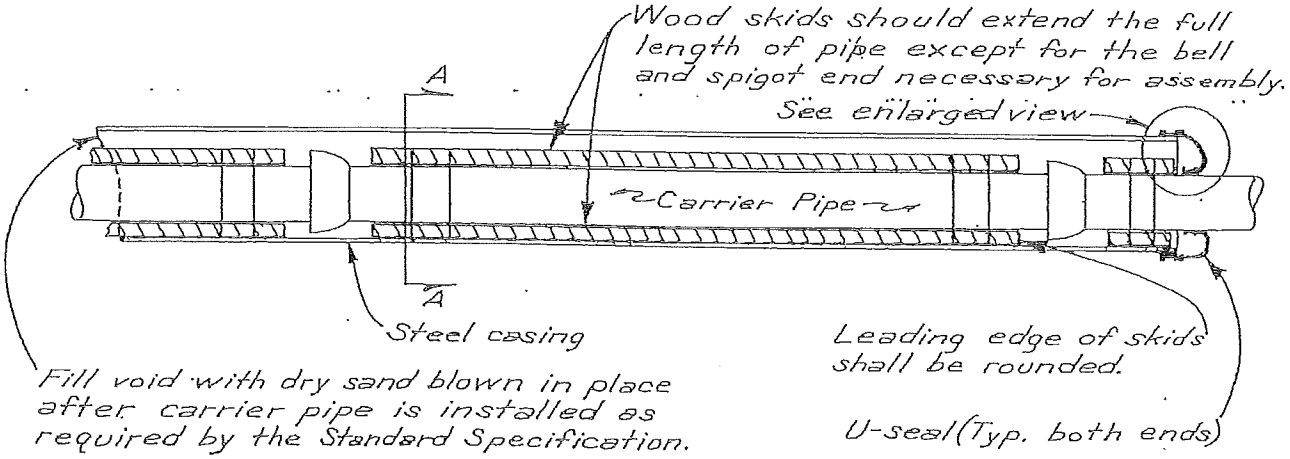

Elevation View

Nominal Diameters in Inches

Main	Casing
4	10
6	12
8	16
10	18
12	20
15	24
18	26
21	30
24	33
27	36

Casing shall conform to AWWA C-200.

P.V.C. carrier pipe shall conform to ASTM D 3034, SDR 35 & ASTM F679, SDR 35.

The four treated oak skids should be high enough to allow for clearance between the bell and casing bottom. Min. size of skids to be 2"x4" (nom.)

The inside surface of the casing and/or the skids shall be lubricated with drill mud or flexsoap to facilitate the sliding of the carrier pipe.

Commissioners of Thurmont, Md.	Revisions		Casing for P.V.C. Main under Highways and Railroads	Detail No. 217
	Date	Note		
	3-08	1 Size		Date:

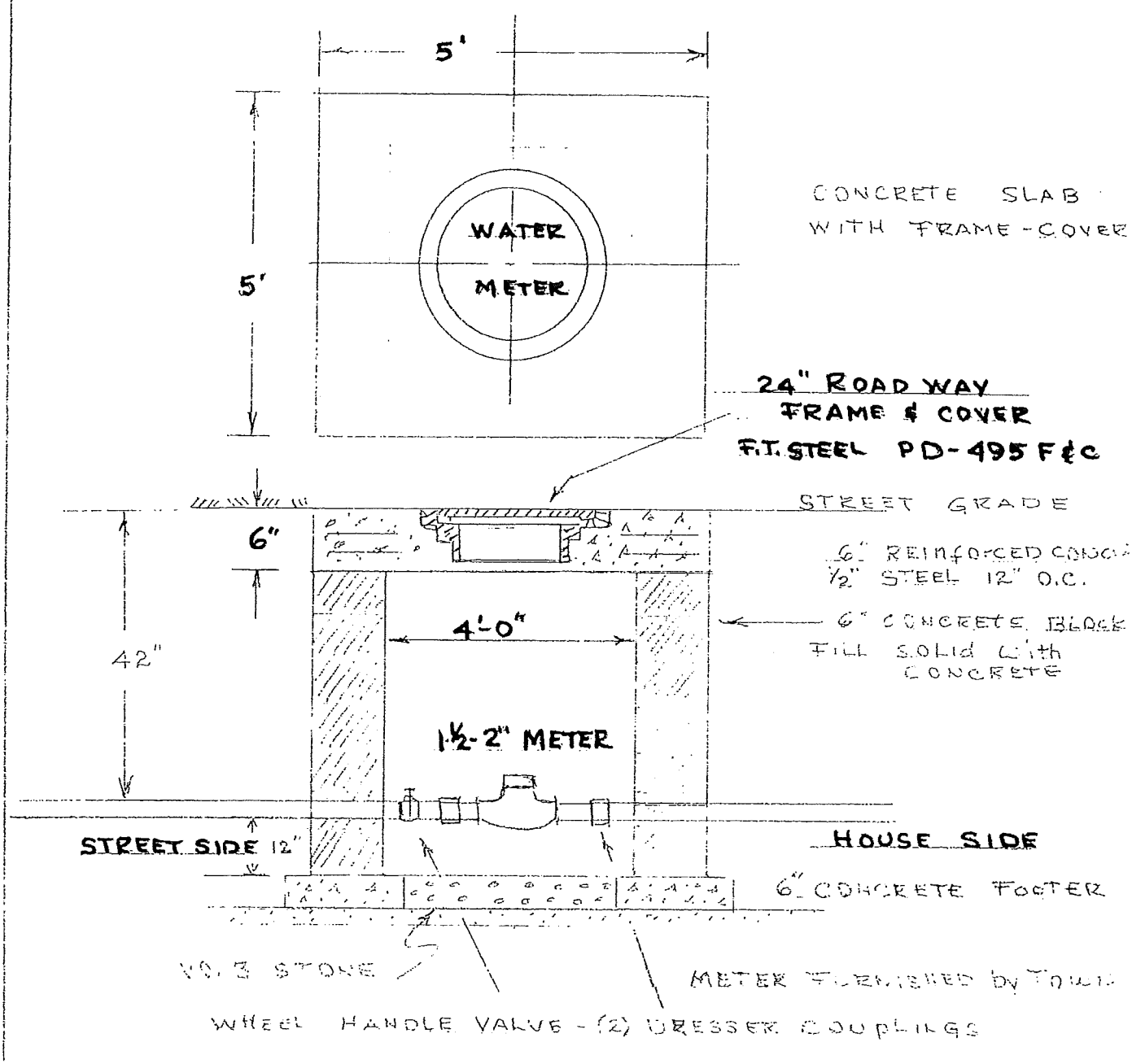

Commissioners
of
Thurmont, Md.

1 1/2 - 2" WATER METER SETTING

DETAIL
No.
218

DATE 6-2-82

ESTIMATED COSTS FOR INSTALLATION OF FIRE FLOW DETECTOR

AND STANDARD WATER SUPPLY SERVICE BASED ON SIX INCH FIRE LINE

1 – 6" Model F.M. Detector meter	$ 1,300.
1 Set 6" cast iron flanges	100.
1 Meter vault, complete with frame and cover inside dimensions – 5'3" x 6'0" height – 6'0", brick or reinforced concrete construction	2,000.
Installation of piping, valves, meter in vault	500.
	$ 3,900.

ESTIMATED COSTS FOR INSTALLATION OF 6" FIRE FLOW METER

AND STANDARD WATER SUPPLY SERVICE, – – ALL WATER METERED

1 – 6" Model FM-CT Fire meter	$ 5,200.
1 Set 6" cast iron flanges	100.
1 meter vault, 12'0" x 7'0"	5,544.
Installation of piping, valves, meter in vault	750.
	$11,594.

Size	A	B	C	Wall Thickness
4"	4'-3"	5'-6"	3'-2"	* 8"
6"	5'-3"	6'-0"	2'-5"	∓12"
8"	5'-11"	6'-11"	2'-2"	∓12"
10"	7'-2"	8'-6"	2'-4"	∓12"

△ Walls Shall Be Brick, Plain MSHA Mix No. 2 Conc., Or Reinforced Concrete.

Wall May Be 8" Reinforced Conc.

Increase To 12" For Depth Over 7'.

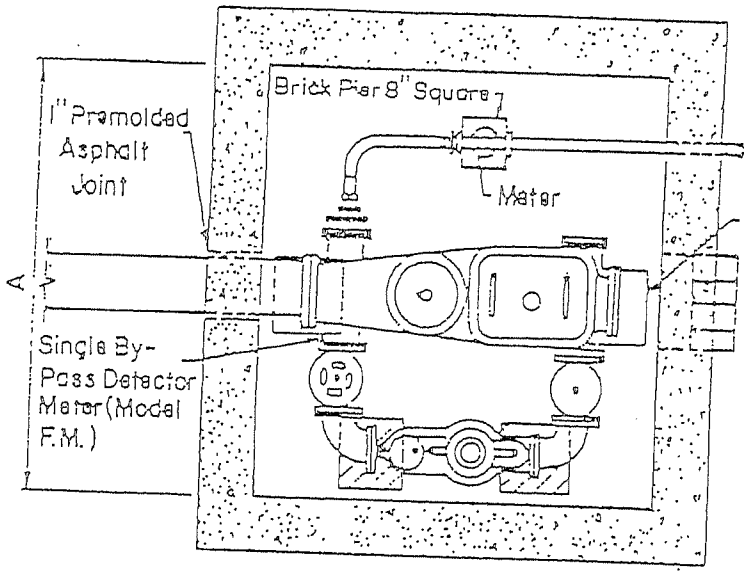

Standard Water Supply Service

Fire Service

NOTES:

1. Concrete And Reinforcing Shall Conform To Frederick City Standard Specifications
2. Place 1/2" Premoulded Bituminous Joint Filler Between Concrete And Meter Frame.

For 4" Service Use 18" Meter Frame & Cover
For 6" Service Use 24" Meter Frame & Cover
For 8" Service Use 30" Meter Frame & Cover

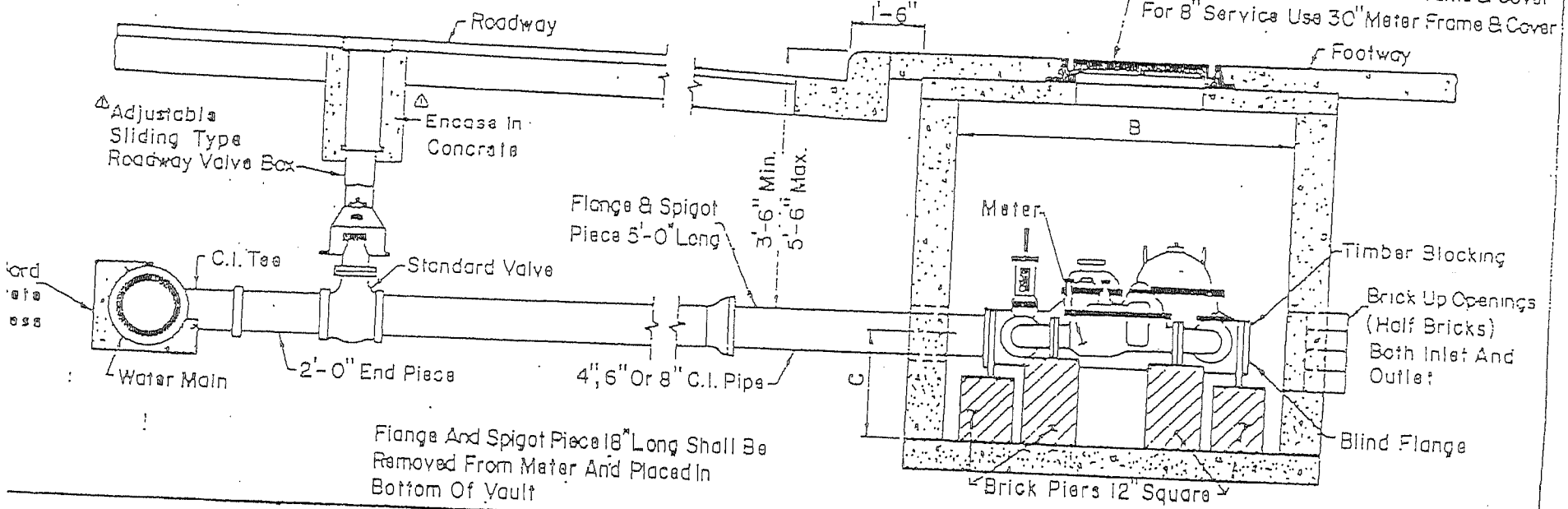

Flange And Spigot Piece 18" Long Shall Be Removed From Meter And Placed In Bottom Of Vault

THE COMMISSIONERS OF THURMONT, MD.

STANDARD INSTALLATION 6", 8" & 10" WATER SUPPLY SERVICE 6", 8" & 10" COMBINED SERVICE

Detail No. 219

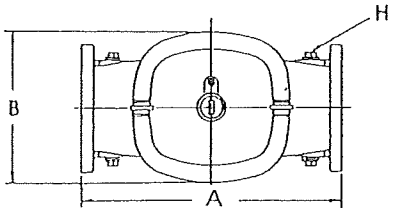

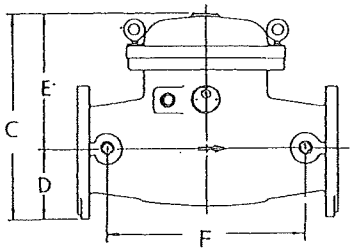

This valve is the same used for the Hersey EDCII Detector Check. Bypass taps on both sides are plugged.

CHECK VALVE WEIGHTS & DIMENSIONS

Size	A	B	C	D	E	F	H	Approx Net Wt.	Approx Gross Wt.
4"	16-1/2	10-5/16	13-1/2	5	8-1/2	12-1/2	1	135	160
6"	22-1/2	12-1/4	17-3/4	6	11-3/4	17	1-1/2	270	300
8"	26-1/2	15-3/4	22-3/8	7-1/2	14-7/8	21	2	460	540
10"	36	18-1/2	27	8-5/8	18	28	2	750	775

FLOW CURVES

4" and 6"

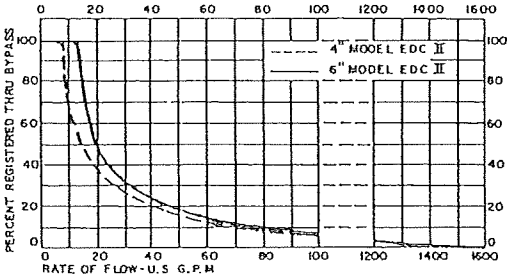

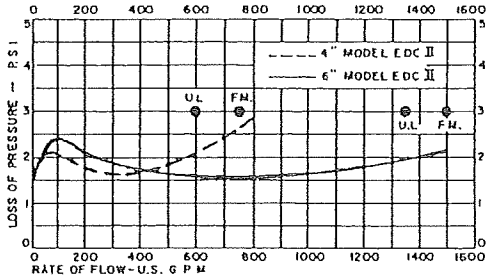

8" and 10"

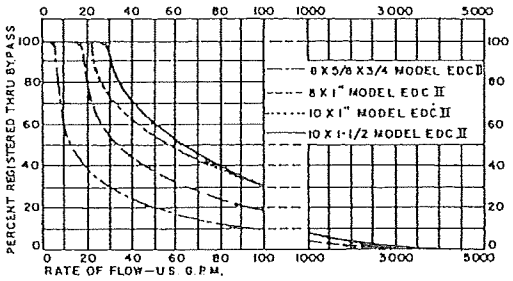

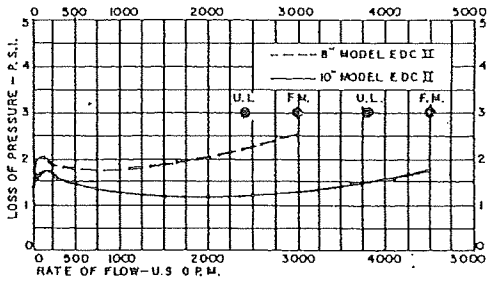

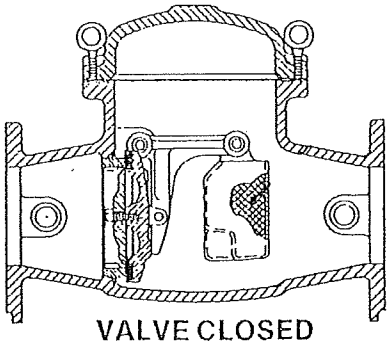

VALVE CLOSED

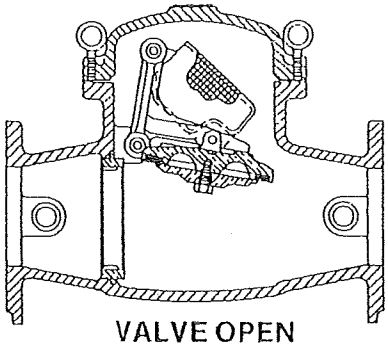

VALVE OPEN

LE FFICES
UTHEAST - 2131 Kingston Court, S.E., Suite 102, Marietta, GA 30067 (404) 952-4424
W ENGLAND - 250 Elm St., Dedham, MA 02026-9115 (617) 326-9400
RTHEAST - 320 Braen Ave., Wyckoff, NJ 07481 (201) 445-0373
DWEST - 1025 Criss Circle, Elk Grove Village, IL 60007 (312) 439-7700
STERN - 7240 East Slauson Ave., Los Angeles, CA 90040 (213) 722-6870

Hersey PRODUCTS INC.
Water Meter & Controls Group
250 Elm Street, Dedham, MA
02026-9115 U.S.A.

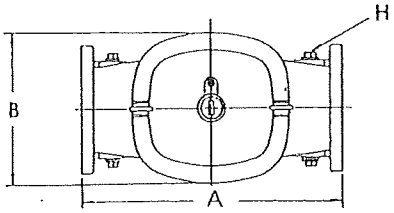

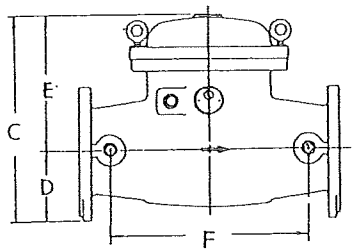

This valve is the same used for the Hersey EDCII Detector Check. Bypass taps on both sides are plugged.

CHECK VALVE WEIGHTS & DIMENSIONS

Size	A	B	C	D	E	F	H	Approx Net Wt.	Approx Gross Wt.
4"	16-1/2	10-5/16	13-1/2	5	8-1/2	12-1/2	1	135	160
6"	22-1/2	12-1/4	17-3/4	6	11-3/4	17	1-1/2	270	300
8"	26-1/2	15-3/4	22-3/8	7-1/2	14-7/8	21	2	460	540
10"	36	18-1/2	27	8-5/8	18	28	2	750	775

FLOW CURVES

4" and 6"

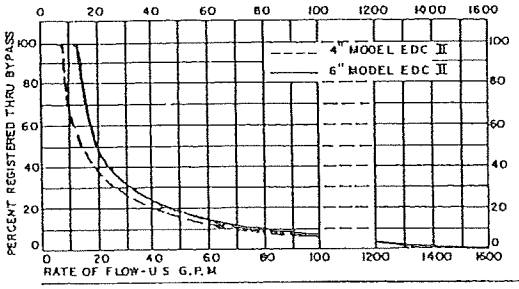

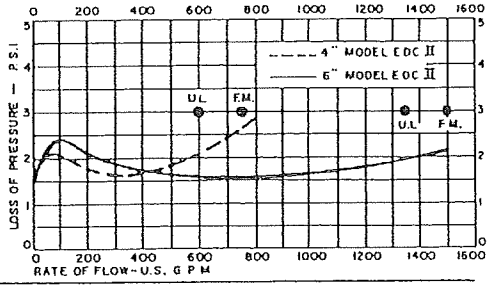

8" and 10"

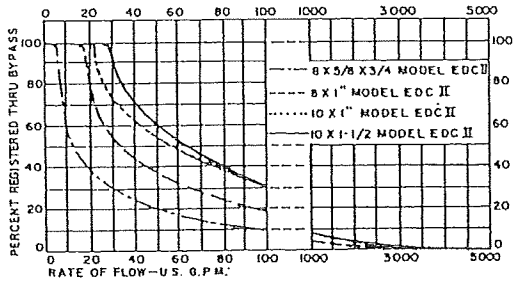

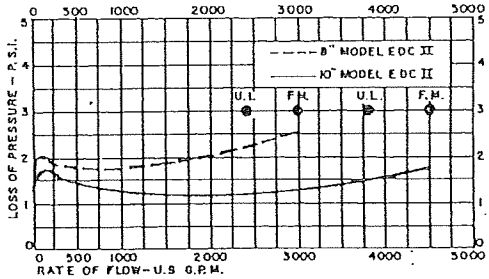

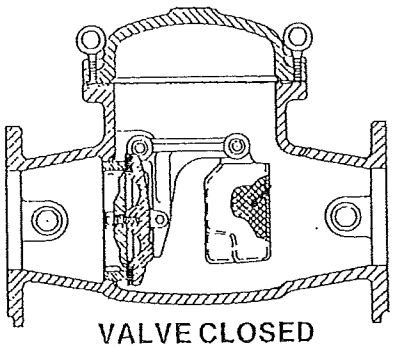

VALVE CLOSED

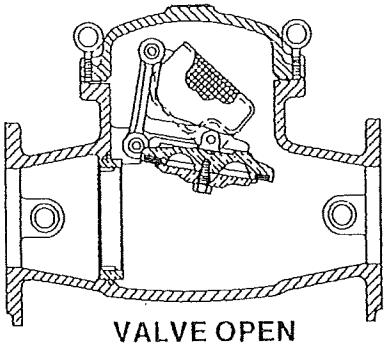

VALVE OPEN

ALES OFFICES
OUTHEAST – 2131 Kingston Court, S.E., Suite 102, Marietta, GA 30067 (404) 952-4424
EW ENGLAND – 250 Elm St., Dedham, MA 02026-9115 (617) 326-9400
ORTHEAST – 320 Braen Ave., Wyckoff, NJ 07481 (201) 445-0373
IDWEST – 1025 Criss Circle, Elk Grove Village, IL 60007 (312) 439-7700
ESTERN – 7240 East Slauson Ave., Los Angeles, CA 90040 (213) 722-6870

Hersey PRODUCTS INC.
Water Meter & Controls Group
250 Elm Street, Dedham, MA
02026-9115 U.S.A.
(617) 326-9400 Telex 92-4352

Copyright © 1986 Hersey Products Inc. Dedham, Massachusetts 02026 U.S.A. Printed in U.S.A. 5M 9/86 TD

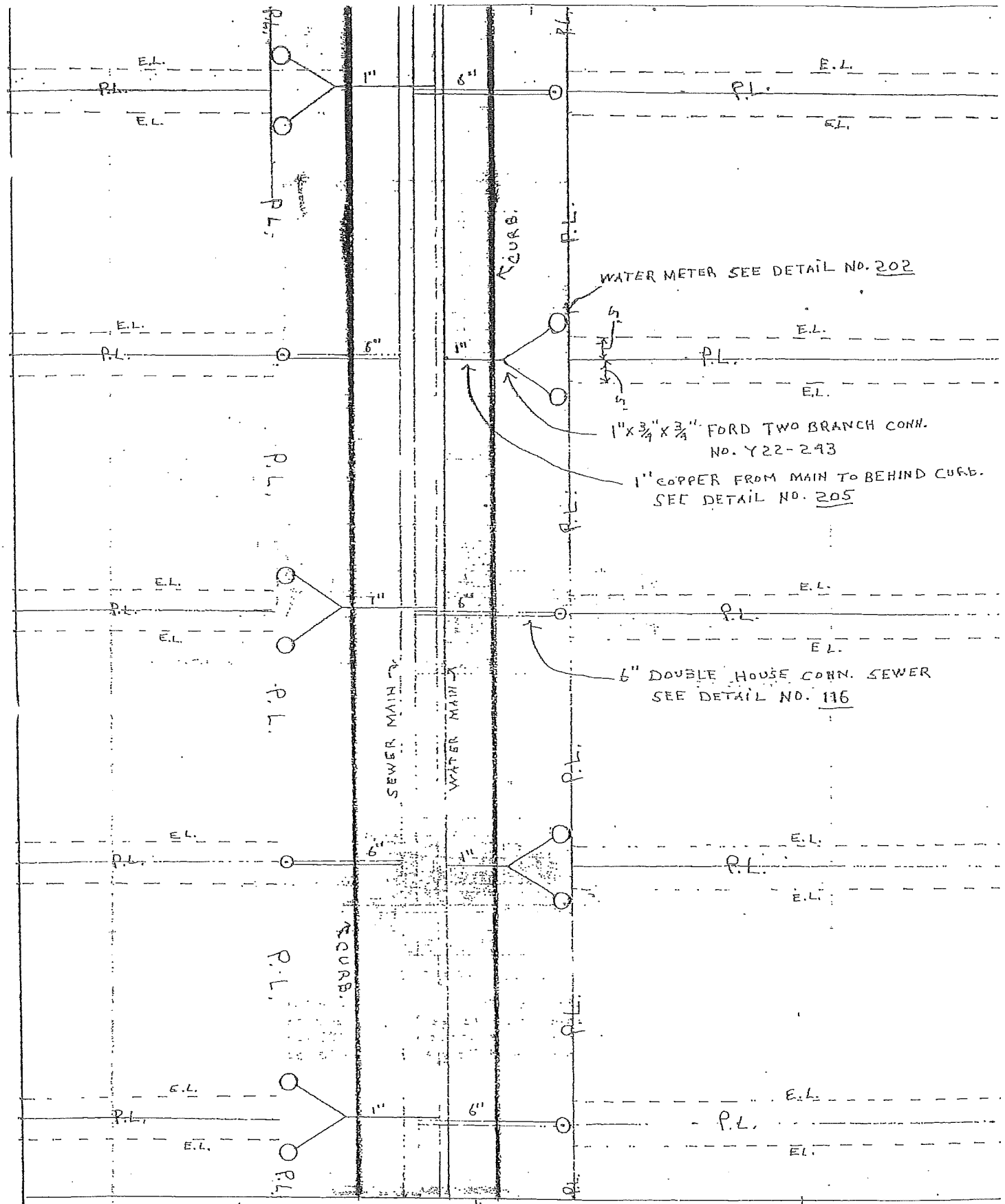

COMMISSIONERS OF THURMONT, MD.	SYMBOLS E.L.=Easement line P.L.=Property line ⊙=6" sewer cleanout ○=water meter vault	DOUBLE WATER HOUSE CONNECTION & DOUBLE SEWER HOUSE CONNECTION LOCATIONS	DETAIL NO. 220 DATE: April 5,198

S P E C I F I C A T I O N S

FOR CONSTRUCTION OF CURB, COMBINATION CURB & GUTTER USING SLIP FORM METHOD

SECTION 300

1. DESCRIPTION

This work shall consist of the construction of concrete curb, concrete combination curb and gutter, concrete monolithic median. All work shall be in accordance with these Specifications and in reasonably close conformity with the lines and grades shown on the Plans, Standards or established by the Engineer.

2. CONSTRUCTION REQUIREMENTS

Concrete curb, combination curb and gutter, and monolithic median may be constructed by either the slip-form or conventional fixed form method.

3. MATERIALS FOR SLIP-FORM METHOD

Concrete: 3000# Mix
Minimum six (6) bag cement
Washed natural sand

4. EXCAVATION

Excavation shall be made to the required depth and the subgrade shaped and adequately compacted at the required elevation. All soft and unsuitable material shall be removed and replaced with suitable material. A minimum of two (2) inch compacted crusher run, No. 6 stone shall be placed over subgrade of curb and gutter.

5. SLIP-FORM METHOD

Slip-form construction shall <u>not</u> be used when the concrete aggregate is gravel.

Slip-form equipment shall be approved by the Engineer and include the incorporation of automatic guidance controls to follow line and grade reference. The use of manual control on slip-form equipment is not permitted. Line and grade reference shall consist of taut lines or wire suspended from supports set in the subgrade or adjacent pavement. The references shall be at 25 ft. (8m) intervals on uniform grades and tangent sections. On vertical and horizontal curves, an additional intermediate support shall be set in the field to establish a reference line acceptable to the Engineer. The use of ski or shoe sensors reflecting variations in grade of existing roadway surface will not be permitted.

6. CONCRETE

The concrete shall be of such consistency that after extrusion it will maintain the shape of the barrier without support. The surface shall be free of surface pits larger than 3/16 inch (5mm) in diameter. The concrete shall require no further finishing other than light brushing with water only. Finishing with a brush application of grout will not be permitted.

If during the operation of the slip-form equipment, a tear occurs, it shall be repaired immediately. The repair shall be made in accordance with good concrete practices that are acceptable to the Engineer. It will be at the sole discretion of the Engineer as to whether the tear can be repaired or whether the areas will require removal and replacement.

Contraction joints shall be sawed or formed at 20ft. (6m) intervals in the barrier and footer. Each joint shall be a minimum of 2 inch (50mm) in depth and 1/8 inch (3mm) in width. Expansion joints will be required when shown on the Plans or as directed by the Engineer. However, sections of 10 ft. (3m) length may be constructed if necessary to make use of delivered concrete. At the terminus of any pour less than 20 ft. (6m), a bulkhead form shall be placed; and six #8 dowels, 2 ft. (0.6m) long, shall be placed through the bulkhead. No joint material is required.

Submitted to:

The Commissioners of Thurmont, Md.

Submitted by:

Marion W. Rice
Superintendent of Public Works

Approved by the Board of Commissioners of Thurmont, Md. on August 7, 1985

James F. Black

James F. Black, President of the Board

STANDARD CLASS "E" GRATE AND FRAME

To be used for
- Standard Class "E" Inlet
- Standard Class "E" Combination Inlet
- Standard Class "H" Combination Inlet

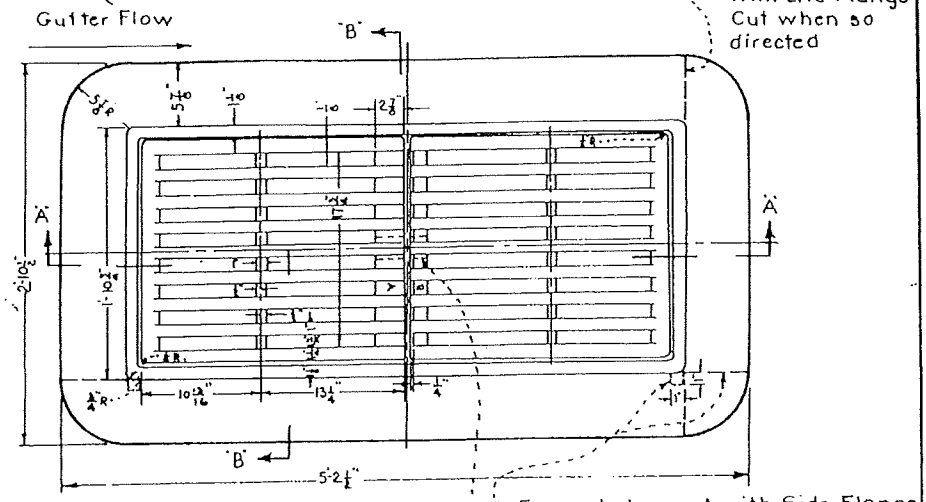

PLAN

Frame to be cast with Side Flange Cut & 1" Lugs at Each End for Class "E" Combination Inlet & Class "H" Combination Inlet.

2" Wide x 1" High Fitting Lug on Frame

Grates slotted for exact fit

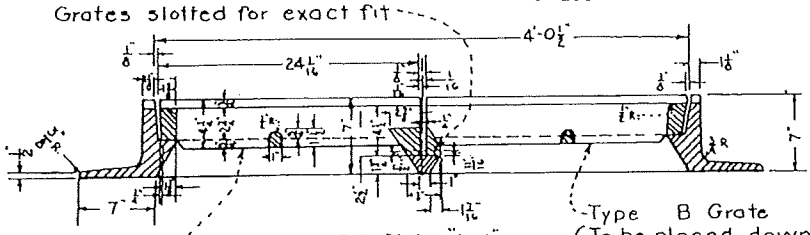

Type A Grate (To be placed upstream)

SECTION "A-A"

Type B Grate (To be placed downstream)

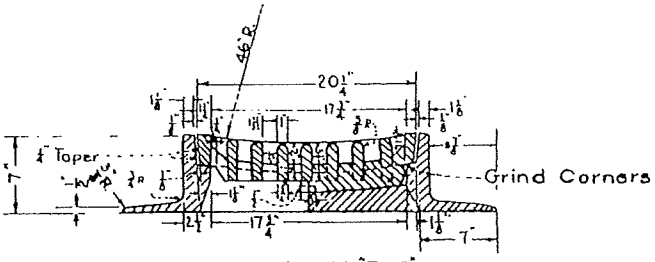

SECTION "B-B"

Approx. Weights

Grates,	Each	216 lbs.
Frame	Full Flange	668 lbs.
Frame	Side Flange Cut	592 lbs.
Frame	End Flange Cut	629 lbs

Commissioners of Thurmont, Md.

STORM SEWER FRAME AND GRATE TYPE "E"

DETAIL NO. 300

DATE: 6-2-82

Note:
For undepressed inlets, use normal pavement slope. For depressed inlets, see S.R.C. Stnd. Plate No IL-20

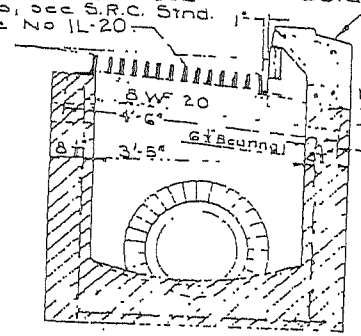

SECTION "B-B"

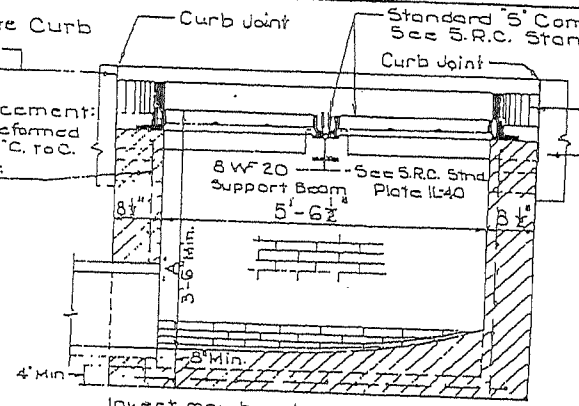

Invert may be plain concrete or 4" brick laid on edge. Invert to slope down toward outlet at the rate of two (2) inches per foot, or as directed.

SECTION "A-A"

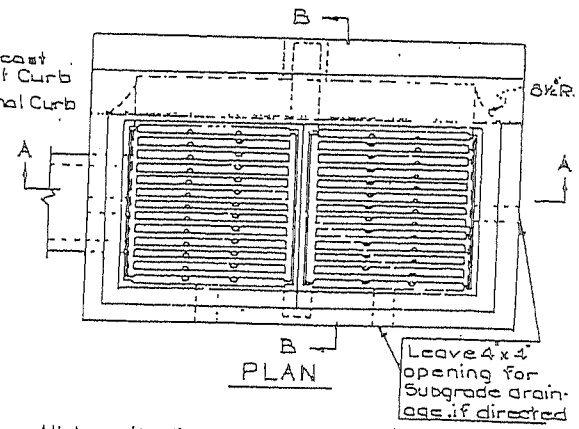

PLAN

GENERAL NOTES.
Inlet may be constructed of reinforced concrete or brick. Size, Type & direction of inlet connection will vary to suit conditions. Top 4" of walls may be brick masonry. Addional brick may be used to bring the grate to grade if required. See latest S.R.C. specifications for inlets. Reinforcement required on outside, as well as on inside, of walls below 7'-0" when "A" is greater than 7'-0". Spacing, same as for inside of wall. Place ½" expansion material of same type approved for pavement between the frame and abutting rigid Pavement, & between ends of inlet curb & Normal Curb "Brick for Masonry" to comply with the latest SRC specifications.

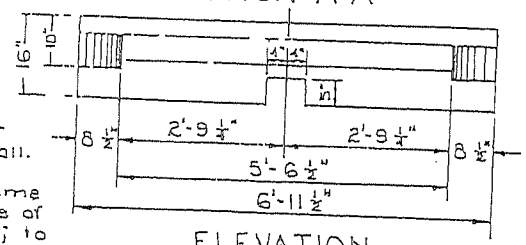

ELEVATION
PRECAST CURB

All Longitudinal Bars - 6'-9½" long.
½"ϕ Corr. Anchor Bars, 24" C.C. - 4 Required.
Beginning 7½" from angle End.
Fasten to Angle with ⅜" fillet weld all around before galvanizing.

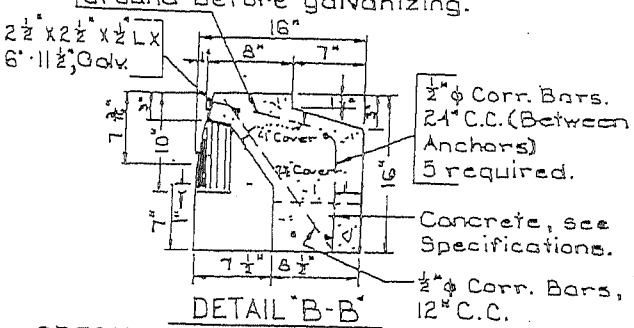

DETAIL "B-B"
SPECIAL PRECAST CURB DETAIL

STANDARD CLASS "S" COMBINATION INLET
(DOUBLE GRATE-TANDEM)

STORM SEWER
INLET CLASS "S"

301

ıissioners
of
Thurmont, Md.

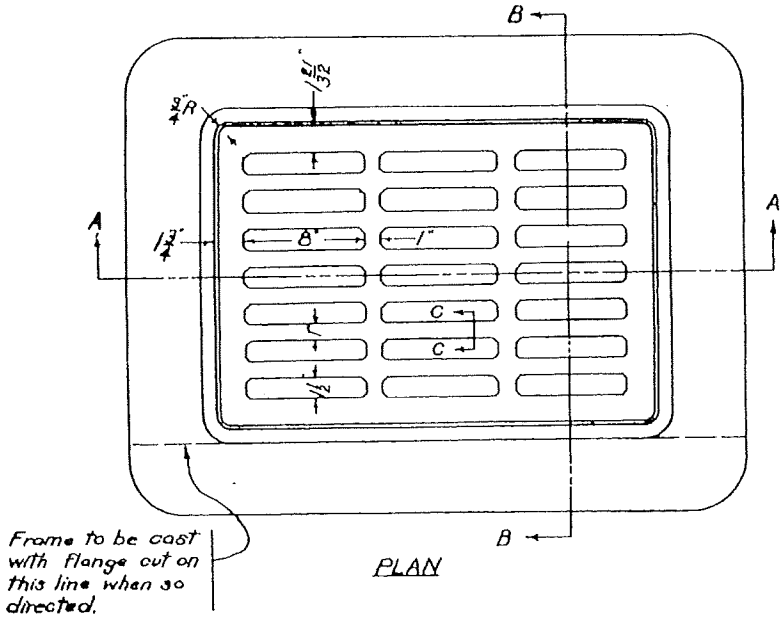

PLAN

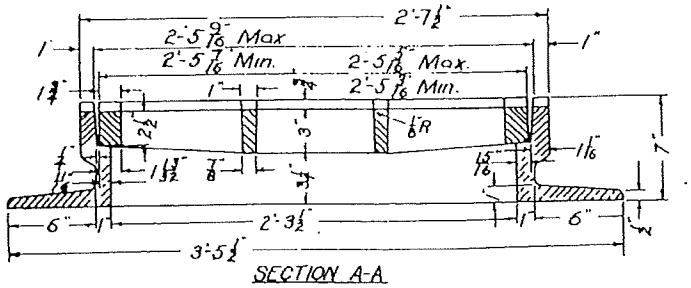

SECTION A-A

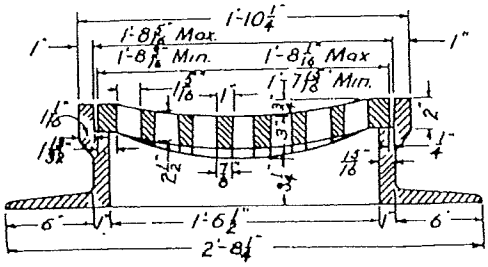

SECTION B-B

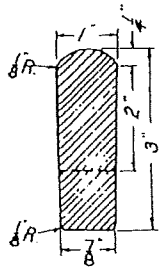

SECTION C-C

AVERAGE WEIGHTS

C.I. Frame - Full ——— 360 lbs.
C.I. Frame - Cut ——— 339 lbs.
C.I. Grate - Approx ——— 161 lbs.

STANDARD CLASS "D" GRATE AND FRAME

Commissioners of Thurmont, Md.

STORM SEWER GRATE AND FRAME TYPE "D"

DETAIL NO. 302

DATE: 6-2-82

Note:
For undepressed inlets, use normal pavement slope. For depressed inlets, see S.R.C. Std Plate No. IL-20.

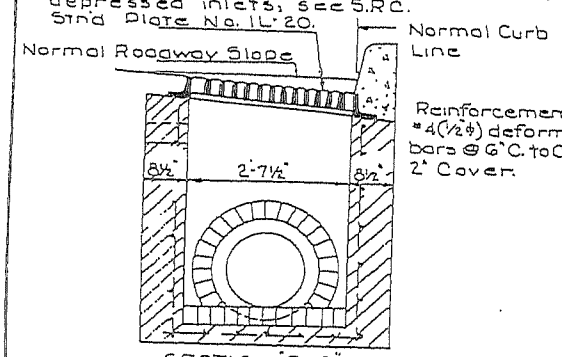

SECTION "B-B"

Invert may be plain concrete or 4" brick laid on edge. Invert to slope down toward outlet at the rate of two (2) inches per foot, or as directed.

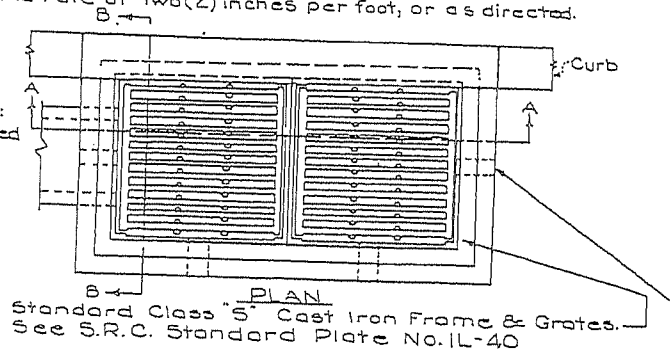

PLAN

Standard Class "S" Cast Iron Frame & Grates. See S.R.C. Standard Plate No. IL-40

Leave 4x4" opening for Subgrade drainage, if directed.

NOTE:
STANDARD CLASS "S" INLET (DOUBLE GRATE TANDEM) MAY BE USED WITH ONE END ADJACENT TO CURB. FRAME WILL BE LAID ON NORMAL SLOPE OF ROADWAY UNLESS NOTED OTHERWISE.
ALL WALL AND FRAME & GRATE DIMENSIONS SAME AS WHEN SIDE IS ADJACENT TO CURB AS SHOWN ON LEFT.
INLET MAY BE USED IN LOW SPOTS WHICH ARE NOT ADJACENT TO CURB.

GENERAL NOTES:
Inlet may be constructed of reinforced concrete or brick. Size, type & direction of inlet connection will vary to suit conditions.

Top 4" of walls may be brick masonry. Additional brick may be used to bring the grate to grade if required. See latest S.R.C. specifications for inlets.

Reinforcement required on outside, as well as on inside, of walls below 7'-0" when "A" is greater than 7'-0". Spacing, same as for inside of wall.

Place ½" expansion material of same type approved for pavement between the frame and abutting rigid pavement, & between ends of inlet curb & Normal Curb. Slope face of curb to meet inside edge of frame as shown in Section "B-B"

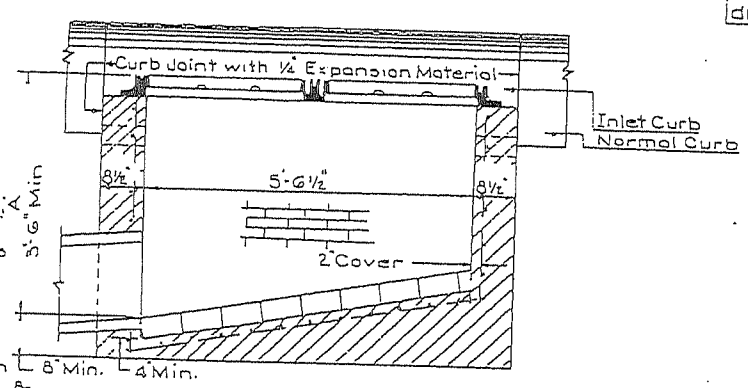

SECTION "A-A"

STANDARD CLASS "S" INLET
(DOUBLE GRATE - TANDEM)

DETAIL NO. 302

STORM SEWER
INLET CLASS "S"

Commissioners of Thurmont, Md.

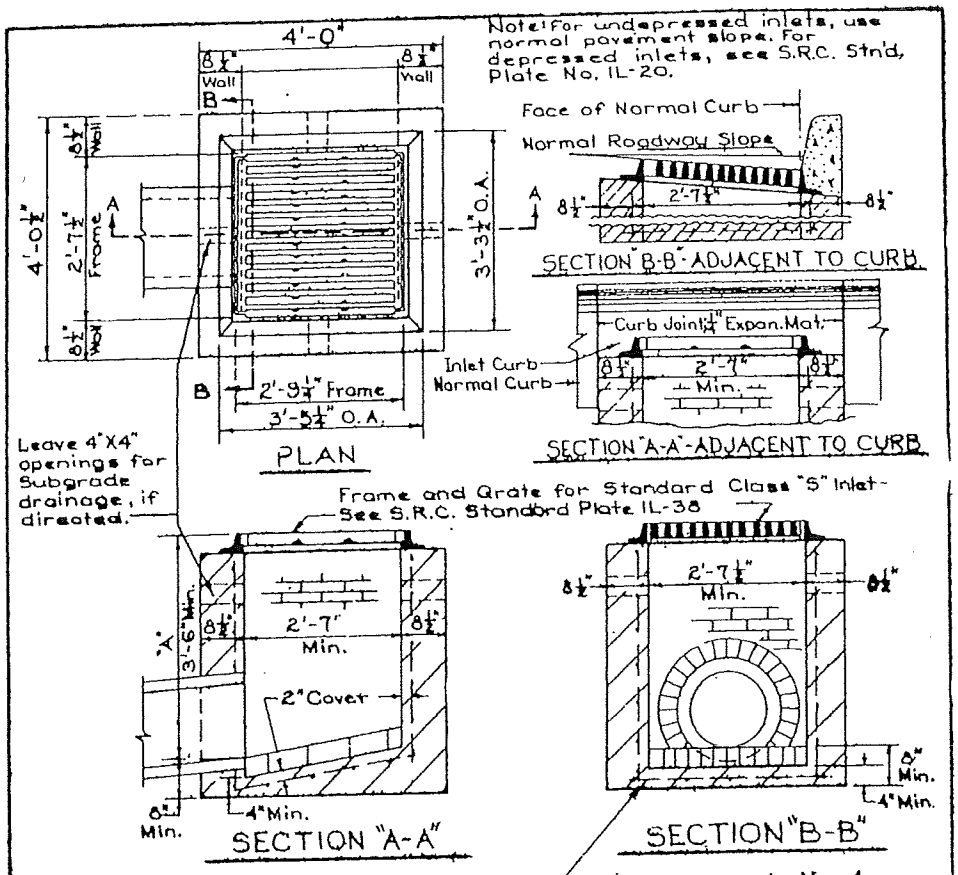

Invert may be plain Concrete, or 4" brick laid on edge. Invert to slope down towards outlet, at the rate of two (2) inches per Ft., or as directed.

Reinforcement: No. 4 (½" ϕ) deformed bars, 2 ways @ 6" C. to C.

GENERAL NOTES:

Inlet may be constructed of Brick or reinforced Concrete. See latest S.R.C. Specifications for Inlets.

Top 4" of walls may be brick masonry. Additional brick may be used to bring the grate to grade, if required.

Reinforcement required on outside, as well as on inside, of walls below 7'-0" when "A" is greater than 7'-0". Spacing, same as for inside of wall.

Place 1/4" expansion material of same type approved for pavement between the frame and abutting rigid pavement, and between ends of inlet curb and normal curb.

Size, type and direction of inlet connection will vary to suit conditions.

When inlet is used adjacent to curb, slope curb face to meet inside edge of frame, as shown in Section "B-B"-ADJACENT TO CURB.

"Brick for Masonry", to comply with the latest S.R.C. Specifications.

STANDARD CLASS "S" INLET (SINGLE GRATE)

Commissioners of Thurmont, Md.

STORM SEWER

INLET CLASS "S"

SINGLE GRATE

DETAIL NO. 304

DATE: 6-2-82

SPECIFICATIONS

FOR

CONSTRUCTION

STREETS AND PARKING AREAS AND CURB-GUTTERS

Section 400

1. EXCAVATION & GRADING

Shall include stripping and stockpiling top soil and spreading of excess excavated materials. It shall also include the borrowing of materials, if needed.

2. MATERIALS

All materials used within the limits of streets or parking areas shall be subject to approval of the Superintendent, to determine their suitability for portions of the work in which they are placed.
Such tests, for approval, may consist of chemical or physical analysis to determine mechanical properties, bearing capacity, density, stability, pertinent to satisfactory performance of the work proposed.

a. The method for testing materials shall be in accordance with the requirements of the A.A.S.H.O. Designation T-99.

3. CONSTRUCTION METHODS

a. Top soil shall first be stripped for the entire width of the right-of-way, and borrow area if needed. Top soil shall be placed as directed for future use.

b. Rock too large to be incorporated in an eight inch thick layer of fill shall not be used. Layers of earth shall be compacted before next layer is placed.

c. No frozen material shall be placed in fills. Any frozen materials removed shall be placed on stockpile outside of construction limits.

d. A uniform procedure shall be followed in placing, spreading, compacting and shaping the materials. It shall be placed in horizontal layers, 8" thick, and each layer shall be carried across the full width of the fill.

e. A smooth grade having an adequate crown shall be maintained to provide good drainage at all times.

f. The sub-grade shall be finished to neat and regular lines conforming to the typical cross section. Any rock or ledge encountered in the roadbed excavation, shall be removed to a depth of nine inches below proposed sub-grade and two feet back of curb line and backfilled with approved materials.

g. Compaction shall be accomplished with a tandem or three wheeled roller of not less than ten tons, or a sheep-foot roller two hundred P.S.I. contact surface pressure, as directed by Superintendent.

h. All roads, parking areas shall be placed to sub-grade as shown on grading plans. Sub-grade shall have a tolerance of one inch within the road or parking area right-of-way.

i. There shall be grade stakes set every twenty-five feet and finish grade marked on these stakes. Stakes to be 30" x 2" x 1" and all station hubs to be 2" x 2" x 12".

4. SURFACE TREATMENT OF ROADS - PARKING AREAS

No types of surface treatment shall be placed until sub-grade has been approved by the Superintendent.

5. TYPES OF SURFACE TREATMENT APPROVED

a. Bituminous Concrete (Blacktop)

Shall consist of asphalt cement, fine aggregate and course aggregate, mixed in accordance to Maryland State Road specifications.

Course aggregate used in the preparation of SN-ST bands must be crushed stone, crushed gravel. When crushed gravel is used, at least 75% of the particles must be crushed.

Fine aggregate for bands ST-SN shall be a combination of one or more crushed aggregates with silica sand. The crushed portion shall comprise 60% - 80% of the total mix in band ST or 65% - 85% of the total mix in band SN. The remainder of these mixtures shall be silica sand.

b. Bituminous Concrete Application

After sub-grade has been approved by Superintendent, there shall then be placed three inches (3") of BI base course mix aggregate, and left standing for 24 hours, after which there shall be placed a two inch (2") SN surface course mix aggregate.

All aggregate shall be rolled with a minimum 10 ton two steel wheel rollers. The SN surface course shall be rolled to within one-half inch (1/2") below top of gutter. The final one inch (1") layer ST Bituminous concrete shall be constructed one (1) year from date or approved time by Superintendent, if such is to be constructed across utility ditches. A prime or tack coat shall be applied before placing the final one inch (1") layer of Bituminous concrete. The tack shall be applied by motor-driven pressure distributor, and shall be applied uniformly at a rate .02 gallons per square yard of surface area.

c. Curb-Gutter

Curb-gutter shall be constructed to the line, grades and dimensions shown on the plans and in accordance with these specifications.

1. Excavation

All necessary excavation shall be completed and the sub-grade properly shaped and adequately compacted at the required elevation. A minimum of two inches (2") of compacted CR #6 stone shall be placed in sub-grade.

2. Forms

Forms shall be of steel of an approved design, securely fastened and braced. They shall be not less than 10 feet long. Curved steel or wood forms shall be used along curves where the radius of the curb face is less than 200 feet. Forms shall be placed that will produce a concrete curb and gutter that will meet the required tolerence of deviations not to exceed one quarter (1/4) inch in 10 feet in either grade or alignment. Before concrete is placed against the forms, they shall be thoroughly cleaned and coated with form release compound each time they are used. Concrete Curb-Gutter shall be cured by using hand sprayer applying a colorless curing compound, at a rate of not less than (0.034) gallons per square yard.

3. Concrete shall be six (6) bag mix silica sand Portland Cement Type 1.

d. Side Walk

1. Sub-grade

The sub-grade shall be compacted after which it shall be accurately trimmed to proper shape and grade.

Where plans do not show section or thickness of the side walk, it shall be four (4) inches thick. The side shall be layed off in five (5) feet blocks and have an expansion joint every thirty-five (35) feet. A colorless curing compound shall be sprayed over entire concrete side walk area.

e. Parking Lot Area

1. Plan

A plan must be prepared accurately using a scale of one inch (1") = ten feet (10') on a sheet of drafting paper size 18" x 24". Plan shall show parking lot in reference to property lines. Plans shall also show adjacent property owners. Plans shall show existing and proposed elevations and contours. All storm water drainage must be shown including any piping that must be installed.

2. Surface Treatment

Grading and surface treatment shall be constructed in accordance with street grading and surface treating specifications.

3. Alternate Surface Treating

As shown in Detail No. 402 may be constructed, if sub-grade meets compaction tests.

4. Bituminous Concrete Curb

Eight inch (8") curb shall be installed using special curbing bituminous concrete mix and construct with motorized curbing machine.

5. Painting

Parking lots shall be painted with four inch (4") white lines showing each space.

BITUMINOUS CONCRETE SPECIFICATION B

Construction Methods

1. Pavers

Unless otherwise permitted by the Engineer, mixtures shall be spread by means of a mechanical self-powered paver capable of spreading the mixture true to line, grade and crown set by the Engineer. Pavers shall be equipped with hoppers and distributing screws to place the mixture uniformly in front of adjustable screeds. The mixture shall be dumped in the center of the hoppers and care exercised to avoid overloading and slopping over of the mixture upon the base. Pavers shall be operated at a speed such that the paving mixture is placed at a uniform, continuous rate. They shall be equipped with a quick and efficient steering device. In base widening, an approved machine capable of spreading the material spilled onto the paved portions of the roadway after the machine has passed, shall immediately be broomed onto the widening. On traveled roads, traffic shall be adequately maintained.

Unless operating on fixed side forms, pavers shall employ mechanical devices such as equalizing runners, straightedge runners, evener arms, or other compensating devices to adjust the grade and confine the edges of the mixtures to true lines without the use of stationary side forms. They shall be capable of spreading the mixtures with segregation, in the thickness of from three-quarters (3/4) to at least three (3) inches, to a width of not less than twelve (12) feet, and of adjustment to spread the mixture in strips of less than twelve (12) feet in width, in steps of one (1) foot or less, to a minimum width of seven (7) feet.

The term "screed" includes any "strike-off" device operated by cutting, crowding or other practical action which is effective on the mixtures at workable temperatures without tearing shoving or gouging and which produces a finished surface of the evenness and texture specified. The screed shall be adjustable to the required elevation and shall have an indicating level attached.

2. Controls for Pavers

Automatic Controls

Unless otherwise specified, all bituminous concrete paving machines shall be equipped with automatic grade and cross slope control devices which will cause the paver to follow a predetermined profile grade and maintain any desired cross slope. The paver shall be equipped with a sensing device to

actuate the controls regulating the screed angle of attack in order to make it pave to the predetermined profile and it shall be possible to use such sensors on either or both sides of the paver. It shall be equipped with some form of slope sensing pendulum or artificial horizon as a reference from which it shall automatically control the cross slope and maintain it at any predetermined amount. The paver shall also be equipped with gauges to indicate the degree of compliance with or the deviation from the required profile grade and cross slope. It shall also provide for manual control as noted elsewhere herein, in addition to automatic operation of either or both of the profile grade and the cross slope controls and while operating automatically it shall be possible to manually override the automatic controls.

Resurfacing and Second Stage Construction

(1) For wedge and/or leveling courses when applied to:

a. Non-rigid pavement
String line and grade must be set on each side of the roadway with fixed controls not to exceed 25' longitudinally and 25' transversely between grade lines.

b. Rigid Pavement
String line and grade with fixed controls need only be on each side of the pavement regardless of the pavement width.

(2) Finished surface of wedge and/or leveling courses must not deviate more than ½" from the grade thus established.

(3) Line, but no grade will be required for base, binder and surface courses.

ROUND TAPERED ALUMINUM POLES

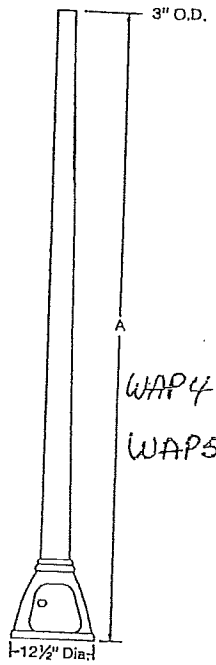

Series PA4000
with Pedestal Base

Ordering Information
Series PA4000

Catalog Number	A Pole Height —Ft.	Shaft Cross Section —In. Dia.	Shaft Wall —In.	Maximum Effective Projected Area—Sq. Ft. Base Wind Velocity—M.P.H. 70	77	90	100
				Gust Wind Velocity—M.P.H 91	100	117	130
PA4000	10	3x4	.125	9.3	7.5	5.1	3.9
PA4001	12	3x4	.125	7.4	5.8	3.8	2.8
PA4002	14	3x4	.125	5.9	4.6	2.8	1.9
PA4003	19	3x5	.125	5.6	4.1	2.2.	1.2
PA4004	24	3x5	.188	3.0	1.8	0.3	0.0

WAP4

WAP5

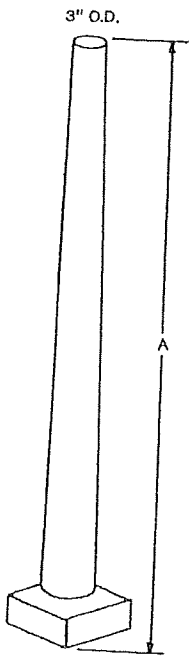

Series PA4100

Series PA4100

Catalog Number	A Pole Height —Ft.	Shaft Cross Section —In. Dia.	Shaft Wall —In.	Maximum Effective Projected Area—Sq. Ft. Base Wind Velocity—M.P.H. 70	77	90	100
				Gust Wind Velocity—M.P.H 91	100	117	130
PA4100	10	3x4	.125	5.8	5.8	4.4	3.5
PA4101	12	3x4	.125	6.4	6.4	5.0	4.0
PA4102	14	3x4	.125	5.2	5.2	3.9	3.2
PA4106	16	3x4	.125	4.1	4.1	3.2	2.5
PA4105	18	3x5	.125	3.4	3.4	2.6	2.0
PA4103	20	3x5	.125	4.5	4.5	3.4	2.7

Additional Ordering Information:

Before making pole selection refer to page 7 for explanation of wind loading and pole selection procedure.

Finish—Brushed aluminum.

Base—Series PA4000—Cast aluminum pedestal base. Access door opening 7½" x 5¾" x 7⅛." Anchor bolt nuts are concealed in base.

Modifications—See Modification Table on page 2.

A variety of pole-top mounting brackets are available for Series PA5100 poles. Contact factory for details and dimensions.

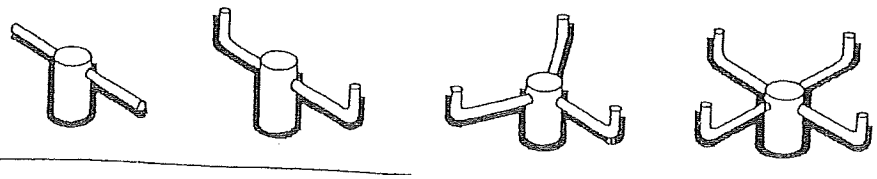

STREET LIGHTING

A. PLAN

A street lighting plan shall be prepared and submitted showing location of each luminaire, the voltage and each circuit.

B. LUMINAIRES

Street light luminaires shall be placed as close to back of curb as possible and shall be spaced at a distance not to exceed 120 feet. Luminaires shall be installed as close as possible to property lines.

Luminaires shall be 100 watt high pressure sodium type having a 120 volt regulated output ballast. They shall be equal to Cooper Lighting No. TW1212129PBK lawnaire. Other approved manufacturers are Westinghouse and General Electric Com-paines. Luminaires shall consist of a cast aluminum base with an access door and acrylic plastic refractor, type III distribution, hinged aluminum canopy. Color canopy shall be specified. Luminaire shall have a prewired terminal block. Luminaires shall have a 120 volt photo-control and receptacle installed on canopy. Base of luminaires shall accept 3" O.D. pipe and shall be furnished with a 100 watt high pressure sodium lamp.

C. LUMINAIRE POST

Shall be round tapered aluminum .125 nominal wall thickness. Posts shall have a transformer base equipped with mounting bolts and nuts. Transformer base shall have a removable bolted access door. Pole shall be 3" O.D. at top and a height of 14 feet from sidewalk. Equal to McGraw-Edison Company #WAP-5-14.

D. UNDERGROUND WIRING

Electrical conductors shall be 600 volt, 3 stranded insulated, #4 aluminum conductor triplexed together, with one of the three conductors having an insulation colored yellow to identify the neutral. Cables shall be placed in 1¼" PVC conduit continuous from one luminaire base to the other base. Contractor shall use ten (10) foot or twenty (20) foot lengths of conduit using solvent weld connections or use the 1¼" cable-in-duct system, manufactured by Intergal Corporation or approved equal. Contractor shall provide a wiring diagram showing how he proposes to make connections to the luminaires and provide electrical service. Contractor shall test all circuits to prove that there are no faults. No splicing shall be approved in any of the circuits, all connections shall be made at base of luminaires, or approved connection boxes. 1¼" PVC conduit shall have a minimum wall thickness of 0.150+/-0.010, schedule 40. (See plan 409)

SPECIFICATIONS

FOR STREET & STRUCTURAL BACKFILL & COMPACTION

Section 450

BACKFILL

1. General:

   a. Do not place, spread or compact fill material while it is frozen or thawing or place upon or adjacent to frozen or thawing ground or during unfavorable weather conditions. When the work is interrupted by rain, fill operations shall not be resumed until field tests indicate that the moisture content and density of the fill are within the limits specified. Any compacted layer which has been frozen shall be removed before the next layer is placed upon it.

   b. Moisture content of fill material shall be within two percent of the optimum for the material as determined by AASHTO T99, Method A. Prior to commencing compaction, fills shall be brought to specified water content by either aerating the material if it is too wet, or spraying the material with water if it is too dry. Thoroughly mix each lift before compaction to assure uniform distribution of water content. Distribute rocks of permissible sizes through the fill material and fill and compact to eliminate all voids.

2. Preparation:

   a. Before depositing fills, remove all vegative matter, mud, muck and otherwise unsuitable soils from the surfaces upon which fill materials are to be placed and fill irregularities and cavities.

   b. Completely fill boring voids and test pit excavations within the limits of excavation with sand, lean concrete or crushed stone up to the level of the proposed subgrade, as directed by the Engineer.

3. Placing Fill Material for Structural Fills and Embankments:

   a. Compact the surface upon which the fill material is to be deposited to the density specified hereinafter for compaction of fill.

   b. Where embankments are made on hillsides or slopes, step or bank the slope of the original ground upon which the fill is to be placed when so directed by the Engineer.

   c. Place fill material in uniform lifts of not more than eight inches in uncompacted thickness. Spread each layer uniformly and evenly. Perform compaction using compacting rollers, pneumatic or vibratory compactors or other equipment and methods approved by the Engineer. Jetting or puddling of backfill will not be allowed without permission of the Engineer.

   d. Compact each eight inch layer to not less than the following percents of maximum densities at a moisture content within two per-

cent optimum for the material as determined by the listed AASHTO method.

1. Under Town of Thurmont Flexible Pavement: 95 percent except for top foot which shall 100 percent per AASHTO T99.

2. In areas other than existing paved street rights-of-way, future street rights-of-way or in any traveled roadway, from a point two feet above the top of the pipe to the bottom of the topsoil, the backfill shall be placed in one foot lifts and solidly compacted by the use of a rubber tired or vibratory roller, or other mechanical device. The density of this backfill shall be not less than 90 percent per AASHTO T99.

e. Continue filling operation until the fill has been brought to the finished slopes and grades shown on the Contract Drawings, making proper allowances for thickness of topsoil, pavement slabs. Construct fill so that surface will be sloped to drain at all times and deposit fill so as to pervent excessive moisture accumulation from rain water.

f. Compaction by rollers or heavy equipment will not be permitted within a five foot strip adjacent to structures.

4. Placing Trench Backfill:

a. Placing trench backfill shall conform to requirements specified hereinbefore for placing structural fills and embankments, modified as follows.

b. Place granular bedding and haunching in accordance with the Standard Details.

c. Compact up to two feet above top of pipe by mechanical tampers in maximum six inch layers.

d. Complete backfill and compaction in not more than one foot lifts, utilizing such compaction equipment as will not damage the pipe and pipe joints. Pipe and pipe joints damaged by the Contractor's operations shall be removed and replaced at no cost to the Town.

e. In new subdivision work where water and sewer house connections are to be placed in the same tranch, backfill above the sewer house connection as hereinbefore specified up to a point four feet below proposed finished grade. Provide temporary backfill above this point to the surface until laying of water house connection is commenced.

At this time, reexcavate as required to lay water line and compact as hereinbefore specified.

g. Do not backfill around pipe, connections or fittings until measurements and locations are completed by the Engineer or Inspector.

FINISH GRADING

1. Perform grading operations so that the excavation will be well drained at all times. Maintain drainage ditches and keep them open and free from soil, debris and leaves until final acceptance of the work. Finish all grading on neat, regular lines conforming to the sections, lines, grades and contours shown on the Plans or if not shown, in accordance with the criteria set forth hereinafter. Perform grading work in proper sequence with all other associated operations.

2. Structures and pavement; bring finished subgrade to the elevation as shown on the drawings. Bring entire area to the finished subgrade elevation before excavating for footings.

3. Grading criteria for structures greater than 20 feet in maximum dimension; perform grading in accordance with the following requirements is not indicated otherwise in the Contract Documents.

   a. Place fill at a minimum slope of two percent for a minimum of ten feet beyond the exterior wall or exterior face of the structure. From the edge of the ten foot extension, slope to existing grade at a maximum slope of 1:2.5.

4. Uniformly grade all areas disturbed by the Project, at trench locations excavated and fill areas and adjacent transition areas so that finished surfaces are at the proposed grade or are approximately at preexisting grades, adjusted as required to provide positive drainage.

MATERIAL STORAGE

1. Deposit excess excavated material and unsuitable material offsite, as directed by Engineer. Topsoil shall be stockpiled in a location approved by the Engineer.

DEWATERING AND DRAINAGE

1. If water is encountered in excavation, provide pumps of sufficient capacity to remove the water while the excavations are being made and until the concrete footings have been poured, the foundation walls or other structures erected up to grade or until the excavation has been backfilled. Do not allow sediment laden water to flow into any watercourse or drainageway or overland without first filtering it through an approved desilting device. Use of woven and non-woven fiber material will be allowed when approved by the Engineer.

2. Provide all necessary temporary surface drainage and keep the same operating to the satisfaction of the Engineer until permanent drainage or finish grading has been compelted. Do not allow damming or ponding of water in gutters or storm drains.

RESTORATION OF SURFACE FACILITIES

1. The Contractor shall restore and restabilize surface features and facilities damaged or destroyed during construction to at least the condition existing before construction.

MEASUREMENT AND PAYMENT

1. Excavation and backfill for utility structures and trench excavation and backfill:

   a. Excavation and backfill for utility structures and trench excavation and backfill with approved material excavated from the bottom of the trench or the lower level of the granular bedding where indicated, will not be measured separately for payment but the cost therof will be included in the unit prices bid for the particular utility facility.

   b. Excavation and backfill for utility structures and trench excavation and backfill in excess of the limits described above will not be paid for except as authorized in writing by the Engineer.

2. Borrow trench backfill, borrow structural fill and borrow embankment:

   a. Borrow trench backfill, borrow structural fill and borrow embankment will be measured by the compacted volume in cubic yards actually placed, as determined from the locations indicated on the Plans and indicated in the Special Provisions.

      Payment for borrow structural fill, borrow embankment and borrow trench backfill will made for the quantities measured for the type required at the unit prices per cubic yard listed in the Bid Schedule.

   b. Payment will include disposal off-site of unsuitable material.

3. Granular Bedding:

   a. Granular bedding for pipe and structures will not be measured for payment but the cost thereof shall be included in the unit price per linear foot in the bid schedule for pipe, specified under other sections, and in the unit price for structures where required.

4. Granular backfill below subgrade:

   a. Excavation of unsuitable material and replacement with granular backfill below subgrade at the direction of the Engineer, will be measured by the cubic yard actually replaced, measured by the volumes by Average End method in the trench pay width as shown on Standard Detail.

      Payment will be made for the quantities measured at the fixed contingent unit price per cubic yard listed in the bid schedule.

   b. Payment will include disposal off-site of unsuitable

5. Sheeting left in place:

   a. Sheeting left in place at the direction of the Engineer will be measured by the thousand board foot of sheeting actually placed, regardless of material, and payment will be made for the quantity measured at the fixed contingent unit price per MBF listed in the Bid Schedule.

      1. Payment will include cost of additional granular bedding material required due to the use of sheeting.

6. Test pits:

   a. Test pits in the numbers, at the locations and the limits directed by the Engineer, shall be measured by the cubic yard of excavated material removed. Those portions of test pits not backfilled but utilized as trench excavation shall be included in pipe prices bid.

      Payment will be made for the quantities measured at the fixed contingent unit prices per cubic yard listed in the Bid Schedule.

   b. Payment will include backfill and material as specified hereinbefore.

7. Rock Excavation:

   a. Rock excavation for pipe and structures will be measured by the cubic yard excavated as shown or directed, measured by the Volumes by Average End Areas method in the trench pay width for pipe and two feet from the outside walls of all structures as shown on Standard Details.

      Payment will be made for the quantities measured at the fixed contingent unit prices per cubic yard listed in the Bid Schedule.

   b. Payment will include disposal off-site of all rock excavated plus the backfill and material as specified hereinbefore.

8. Non-payment items:

   a. The following items of work will not be measured for payment but will be considered as incidental to the Contract:

      1. Dewatering, watering.

      2. Finish grading.

      3. Preparation of subgrade.

      4. Compaction tests as required by the Engineer.

      5. Sheeting and shoring, for the convenience of the Contractor or for compliance to the safety regulations.

6. Blasting.

7. Removal of excess material.

8. Granular base under slabs and pipe bedding.

9. Placing structural fill and embankment using suitable materials available on site.

Submitted to:

The Commissioners of Thurmont, Md.

Submitted by:

Marion W. Rice
Superintendent of Public Works

September 29, 1986

Approved by the Board of Commissioners of Thurmont, Md. - September 29, 1986

James F. Black

James F. Black, Pres. of the Board

STREET EXCAVATION & REPAIR PERMIT

FOR

WATER & SEWER LATERALS

OWNER/APPLICANT: _____

ADDRESS: _____

_____

WATER LINE ( ) SEWER LINE ( )

APPORX. LENGTH OF LINE _____FT.

STREET OWNERSHIP: MUNICIPAL ( ) STATE HIGHWAY ( )

TYPE OF SECURITY: MUNICIPAL STREET - $ 500.00 ( )

STATE HIGHWAY - -$ 1500.00 ( ) INC. RTS. 806,550 & 77

THE UNDERSIGNED APPLICANT HEREBY AGREES THAT THE COMMISSIONERS OF THURMONT HAVE THE RIGHT TO APPLY ANY AMOUNT OF THE SECURITY NECESSARY TO MAKE TEMPORARY OR PERMANENT STREET REPAIRS, IF FOR ANY REASON, APPLICANT FAILS TO COMPLETE HIS OBLIGATION IN THE DESIGNATED TIME LIMIT.

WORK TO BEGIN: _____

TEMPORARY PAVING, COLD MIX BLACKTOP-NO STONES,

TO BE COMPLETED: _____

PERMANENT PAVING TO BE COMPLETED: _____

ALL WORK TO BE COMPLETED IN ACCORDNACE WITH THE TOWN OF THURMONT AND STATE HIGHWAY ADMINISTRATION CONSTRUCTION SPECIFICATIONS.

OWNER/APPLICANT: _____

STREET REPAIR OVER DITCHES

1. TOWN MADE THE INSTALLATION OF WATER & SEWER LATERALS, FROM THE MAIN TO THE PROPORTY LINES, THE RESPONSIBILITY OF THE PROPERTY OWNER.
2. ANY CONTRACTOR CAN DO THE WORK, NO REGISTRATION NEEDED TO DO PLUMBING WORK.
3. MOST CONTRACTORS INSTALL STREET REPAIRS PROPERLY, BUT SOME DO NOT. WE CAN NOT GET THEM BACK TO COMPLETE THE WORK.
4. IF WE CAN NOT GET CONTRACTORS BACK TO COMPLETE THE WORK, THEN THE TOWN HAS TO MAKE THE REPAIRS WITH NO GUARANTEE OF REIMBURSEMENT.
5. IF DITCHES CROSS STATE HIGHWAY PROPERTY, WE ARE RESPONSIBLE SINCE WE HAVE THE PERMIT.
6. THIS SITUATION HAS OCCURRED TWICE OUT OF THE LAST THREE INSTALLATIONS.

SUGGESTIONS

1. THE BUILDER OR PROPERTY OWNER OBTAIN A PERMIT PRIOR TO ANY CONSTRUCTION.
2. DEPOSIT CERTIFIED CHECK PAYABLE TO THE COMMISSIONERS OF THURMONT, TO COVER REPAIRS, IF NECESSARY, FOR ANY REPLACEMENT. (PERMANENT REPLACEMENT BY QUALIFIED CONTRACTOR)
3. DEPOSIT: $ 500.00 FOR MUNICIPAL STREET; $ 1,500.00 FOR STATE ROADS AND ROUTES 806,77 AND 550.
4. TIME LIMIT FOR PERMANENT REPAIRS OR TOWN WILL HIRE CONTRACTOR TO COMPLETE. (CHANGEABLE DUE TO WEATHER CONDITIONS)

APPROVED BY THE COMMISSIONERS OF THURMONT, MARYLAND, FEBRUARY 4, 1987 -

BY: James F. Black

James F. Black, Pres. of the Board

STANDARD SPECIFICATIONS

SECTION 500

SEEDING AND SODDING

1. General

a. Description:

This section includes seeding and sodding to the limits shown as required for restoration and restabilization of disturbed areas, and as directed by the Engineer, including preparation of seed and sod bed, fertilizer, lime and mulch, in accordance with the Contract Documents.

b. Submittals

1. Submit certificates of compliance before delivery of materials as specified .

a. Topsoil
b. Seed
c. Sod
d. Fertilizer
e. Lime
f. Mulch

c. Construction Criteria

1. Unless otherwise indicated provide sod on those disturbed areas which supported a previously established stand of turf; on slopes 3:1 and steeper; and where directed by the Engineer. Provide seeding on all other disturbed and filled areas.

d. Reference Documents

1. The Contractor shall obtain and maintain on the site at all times a copy of the requirements of Maryland Turf Grass Law and Regulations, Publication No. 41, available from the Seed and Turf Lab, Maryland Department of Agriculture, College Park, Maryland 20742.

II. Materials

a. Topsoil

1. General Requirements

a. Topsoil shall consist of fertile, agricultural soil capable of sustaining vigorous plant growth. It shall contain not less than 1-1/2 percent organic matter as determined by MSHA standard method of testing and shall have a ph value between 6.0 and 7.6.

b. Topsoil shall be free of roots, rubbish and other objectionable materials such as Bermuda Grass, Johnsongrass, Canada Thistle, Quack Grass, Poison Ivy and kindred roots and any material harmful to plant growth. Topsoil shall provide sufficient pore space to permit adequate root penetration.

c. Topsoil shall meet the following analysis as determined by the MSHA standard hydrometer test. Sand, silt and clay are as defined in AASHTO M146.

Min Percent	Max. Percent
Sand 30%	50%
Silt 30%	50%
Clay 5%	20%
Humus 3%	5%

d. Special purpose topsoil shall be used where indicated. General purpose topsoil shall be used in all other areas.

2. Special Purpose Topsoil

a. Special purpose topsoil shall meet the requirements listed above with the following graduation:

Sieve	Min. Percent Passing
2"	100%
No. 4	90%
No.10	80%

b. Special purpose topsoil shall be capable of hand spreading.

3. General Purpose Topsoil

a. General purpose topsoil shall meet the general requirements set forth above and shall contain no stones greater than 1-1/2 inches in their greatest dimension.

4. Materials available on site which meet the specified requirements may be utilized with the permission of the Engineer.

b. Seed

1. Seed shall be supervised and mixed by the Maryland Department of Agriculture and shall conform to requirements of Maryland Turf Grass Law and Regulations, Publication No. 41.

2. Supply the following for improved areas which will be mowed regularly, and are dry and semi shady.

a. Mix

Kentucky Bluegrasses
20-30% Certified Merion
20-30% Certified Kenblue or South Dakota Certified
10-40% Certified Adelphi, Baron Birks or Pennstar
Creeping Red Fescue
10-50% Certified Pennlawn or Jamestown

b. Seeding Rate: Sow mixture at 140 pounds per acre, or three pounds per 1,000 square feet between March 1 and May 31 and between August 15 and October 31.

c. Premixed Certified seed mixture labeled "Maryland Certified 30-30-30-10 Seed Mixture" will be acceptable.

3. Supply the following for slope areas not to be mowed (or mowed infrequently).

a. Mix

Same as 2a above with Crown Vetch or Lovegrass added to this mixture.

b. Seeding Rate: sow mixture at the rate listed in 2a above with an additional ten (10) pounds of Crown Vetch, or four (4) pounds of Lovegrass per acre of area seeded.

4. Supply the following for improved areas which will be mowed regularly and are dry, in heavy shade:

a. Mix

Kentucky Bluegrasses
20% Certified Merion
30% Certified Kenblue or South Dakota, Adelphi, Baron, Birka or Pennstar(any combination thereof).
Creeping Red Fescue
50% Certified Pennlawn or Jamestown

b. Seeding Rate: sow mixture at 140 pounds per acre or three pounds per 1,000 square feet between March 1 and May 31 and between August 15 and October 31.

5. Supply the following for unimproved areas not to be mowed (or mowed infrequently) and are drought-prone:

a. Mix

Tall Fescue - 80-90% Certified Kentucky 31
Kentucky Bluegrass: 10-20% Certified Kenblue, South Dakota Certified or common.

b. Seeding Rate: sow mixture at 215 pounds per acre or five pounds per 1,000 square feet between March 1 and May 31 and between August 15 and October 31.

6. Supply the following for poorly drained areas and areas that are subject to frequent flooding: or for temporary grass stabilization.

   a. Mix

      Tall Fescue: 75% Certified Kentucky 31
      Reed Canarygrass: 25% (certified not required)

   b. Seeding Rate: sow mixture at sixty pounds per acre or 1.5 pounds per 1,000 square feet between March 1 and May 15 and between August 15 and October 31.

c. Sod

   1. General: sod shall be certified or approved grade as designated by the Maryland Department of Agriculture and shall conform to requirement of Maryland Turf Grass Law and Regulations, Publication No. 41. Sod shall be machine cut at a uniform thickness of 3/4 inch +/- 1/4 inch, excluding top growth and thatch. Each individual sod piece shall be strong enough to support its own weight when lifted by the ends. Broken pads, irregularly shaped pieces and torn or uneven ends will not be acceptable.

   2. Sod replacing previously established stand of turf shall be similar in kind to that which existed prior to construction.

   3. Sod placed where no grass existed prior to construction or replacing a lawn consisting mainly of coarse textured grass without a dominate species shall be as follows:

      a. "Maryland State Approved" multi-use turf sod

         Tall Fescue: 90-100% certified Kentucky 31
         Kentucky Bluegrasses: 0-10% certified Kenblue(Kentucky origin) Certified Merion, or South Dakota Certified.

   4. Sod replacing a lawn consisting mainly of fine textured grass without a dominant species shall be as follows:

      a. Maryland Certified 30-30-30-10 sod.

d. Fertilizer

   1. Fertilizer shall be uniform in composition, free flowing and delivered to the site fully labeled according to applicable state fertilizer laws and shall bear the name, trade name or trademark and warranty of the producer.

   2. The Contractor may submit soil samples to an approved soils test-

ing laboratory for fertilizing recommendations. Recommendations shall be submitted to and approved by the Engineer before implementation.

3. Otherwise, fertilize at the following rates:

a. Temporary Seeding: Supply 10-20-10 or equivalent at the rate of 600 pounds per acre or fifteen (15) pounds per 1,000 square feet.

b. Permanent Seeding: Supply 600 pounds of 0-20-20 per acre with limestone. Immediately prior to seeding supply 400 pounds of 38-0-0 ureaform and 500 pounds of 10-20-20 or equivalent per acre.

c. Sodding: Supply fifteen (15) pounds of 10-20-10 per 1,000 square feet. Immediately prior to sod installation, supply 3.5 pounds of slow release nitrogen per 1,000 square feet. Slow release nitrogen shall be approximately 1/3 immediately available and 2/3 water insoluble, such as urea formaldehyde or isobutyledene urea.

e. Lime

1. Lime shall be ground limestone containing at least fifty (50) percent total oxides (calcium oxide plus magnesium oxide). Limestone shall be ground to such a fineness that at least fifty (50) percent will pass through a 100 mesh sieve and 98 percent will pass through a 20 mesh sieve.

2. S upply seventy (70) pounds per 1,000 square feet (1-1/2 tons per acre) on sandy and silty soils or 100 pounds per 1,000 square ft. (2.3 tons per acre) on clay or clay loam soils.

f. Mulch

1. Mulch for protection of permanent seeding shall conform to the following requirements:

a. Straw - clean, weed free, unrotted straw (not less than 48 hours after mowing) applied at a rate of not less than 70 lbs. per 1,000 square feet (1½ tons per acre) and shall be anchored with: mulch anchoring tool (flat slopes), mulch nettings, cut back and emulsified asphalt (five gallons per 1,000 square feet), curasal ah (five gallons per 1,000 square feet), Tera Tack II (20 gallons per 1,000 square feet), or Petroset (manufacturer's recommendations). On slopes eight (8) feet or more high, the rate of liquid binders shall be increased by 60%.

b. Mulch nettings, jute or excelsor blanket.

2. Mulch utilized as temporary protection and stabilization shall

conform to the above materials requirements. Rate of application shall be as directed by the Engineer. Stone much will be permitted at the option of the Engineer.

3. Use either straw of cellulose wood fiber for landscaping.

III. Execution

a. Permanent Seeding:

1. Harrow, disc, or otherwise loosen subsoil to a depth of four (4) inches. Spread topsoil evenly over prepared subsoil to the following depths:

a. Slopes 3:1 or steeper; two inches after compaction.

b. Slopes flatted than 3:1, four inches after compaction.

2. Remove objectionable material such as tones, 1½ inches or larger, clods, brush, roots and trash from the top four inches of soil.

3. Apply lime and fertilizer at the rates specified in "materials", and thoroughly mix into the top six inches. Scarify the area and rake until the surface is leveled to provide a maximum of two inches in variation, and the soil is friable and of uniform fine texture.

4. Immediately prior to seeding apply additional fertilizer at the rates specified in "materials", and work into the top two inches of the soil.

5. Perform harrowing, discing, scarifying and raking on the contour of slopes steeper than 3:1.

6. Moisten seedbed during periods of high temperatures and when directed by the Engineer.

7. Apply seed mixture uniformly with mechanical power driven seeders, mechanical cyclone hand seeders or hydroseeding equipment. (Slurry for hydroseeder may contain seed and fertilizer only).

8. Culipack or roll one inch into soil in floodplain areas. Rake, roll or drag the seedbed in all other areas, if hydroseeder or cyclone seeder is used.

9. Apply mulch, immediately after seeding, at the rates specified in "materials".

10. Anchor mulch as specified

b. Temporary Seeding

1. Loosen top two inches of seedbed.

2. Apply lime and fertilizer at the rates specified in "Materials".

3. Moisten seedbed during periods of high temperature and when directed by the Engineer.

4. Apply seed mixture uniformly with mechanical power drawn seeders, mechanical cyclone hand seeders or hydroseeding equipment. (Slurry for hydroseeder may contain seed and fertilizer only).

5. Culipack or roll seed one inch into soil in floodplain areas. Rake, or drag seedbed in all other areas, if hydroseeder or cyclone seeder is used.

6. Apply mulch, immediately after seeding, at the rates specified in "materials".

7. Anchor mulch as specified.

c. Sodding

1. Harrow, disc or otherwise loosen subsoil to a depth of five inches. Spread topsoil evenly over prepared subsoil in the following depths.

   a. Slopes 3:1 or steeper, two inches after compaction.

   b. Slopes flatter than 3:1, four inches after compaction.

2. Remove objectionable material such as stones, 1½ inches or larger, clods, brush, roots and trash from top four inches of soil.

3. Apply lime and fertilizer at the rates specified in "materials" and thoroughly mix into the full depth of the topsoil. Scarify the area and rake until the surface is leveled to provide a maximum of two inches in variation, and the soil is friable and of uniform fine texture.

4. Immediately prior to sodding apply additional fertilizer at the rates specified in "materials" and work into the top two inches of topsoil.

5. Perform harrowing, discing, scarifying and raking on the contour of slopes steeper than 3:1.

6. Deliver sod to the site within twenty-four (24) hours after being cut and install sod within thirty-six (36) hours after being cut.

7. During wet weather, dry sod sufficiently to prevent tearing during handling and placing. During dry weather, water sod sufficiently before lifting to insure its vitality and to prevent dropping off of soil during handling.

8. Sod which has been desiccated will be rejected and shall be replaced by the Contractor at no cost to the County.

9. Place sod in a straight line parallel to one another. Stagger lateral joints and butt tight. On slopes 5:1 and steeper, lay sod with long edges parallel to the contour starting at the top of the slope. In drainage ditches and sodded channels, lay sod with the long edge parallel to the flow of water.

10. On slopes 2:1 and steeper and in surface drainage v-shaped or flat bottomed ditches, stake each strip of sod with at least two stakes, spaced not more than two feet apart, or wire staples.

11. Immediately upon completion of a section of sodding, roll, tamp and water until the underside of the sod pad and soil surface beneath it are thoroughly wet and in contact with each other so as to eliminate air pockets. (The recommended rate of watering is one (1) inch per acre.)

12. Completion of laying, rolling, tamping and watering shall be within an eight hour period.

d. Mulch Only

1. Perform grading as required. Place and anchor mulch only at the rates specified in "materials" where indicated and where directed by the Engineer.

e. Time Restrictions

1. When permanent seeding or sodding is specified or directed, and seeding is not allowed because of time restrictions specified in "materials", utilize one or more of the following methods to prevent erosion and sedimentation until such time as permanent seeding or sodding is allowed:

   a. Place and anchor straw mulch or wood chips.

   b. Apply temporary seeding.

   c. Prepare soil as for permanent seeding and then mulch as specified: overseed during next seasonal seeding period.

   d. Provide other erosion control measures acceptable to the Engineer and the sediment control inspector.

   e. Remove straw or wood chips used as temporary mulch or work into subsoil to a minimum depth of six inches prior to initiation of permanent seeding application.

f. Maintenance of Seeded and Sodded Areas:

1. Maintain seeded and sodded areas until accepted in writing by the Engineer.

2. Water seeded and sodded areas as necessary to maintain adequate moisture in the upper four inches of soil and keep mowed to a height of two to three inches, do not remove more than 1/3 of the grass leaf during initial mowing. Do not mow sod until it is firmly rooted.

3. Inspect seeded and sodded areas for failures and necessary repairs.

4. Provide replacements during the specified planting seasons.

5. If stand of turf is inadequate as determined by the Engineer, overseed and fertilize using half of the rates originally applied, or resod.

6. If stand is over sixty (60) percent damaged, as determined by the Engineer, reestablish following original lime, fertilizer, seed or sod bed preparation and seeding or sodding recommendations.

STANDARD SPECIFICATIONS

CHAIN LINK FENCE

SECTION 600

I. General

a. Description

This section includes providing chain link fencing, gates and accessories, as indicated in accordance with the Contract Documents.

b. Submittals

1. Submit samples for the following:

a. Wire mesh fabric: each width and type to be used-one sample, twelve (12) inches long.

b. Posts, railing, braces, gate frames: one sample of size and type to be used - twenty-four (24) inches long.

c. Truss rod and turnbuckles - one each.

d. Tension wire - one sample, twenty-four (24) inches long.

e. Barbed wire - one sample, twenty-four (24) inches long.

f. Tension bar - one sample, twenty-four (24) inches long.

g. Fabric ties with hardware - four each.

h. Rail and brace ends and post caps - two each.

i. Barbed wire extension arms - one each type.

2. Submit certified test reports before delivery of materials as specified.

II. Materials

a. General

1. Chain link fencing shall conform to applicable parts of FS RR-F-191 as modified herein.

b. Posts FS-RR-F-191/3A as modified herein:

1. Posts, pipes, gate frames, caps, barbed wire and other accessories

and fasteners shall be fabricated of hot dip galvanized steel, or aluminum alloy FS6063-Tt6, as applicable. Posts and rails shall be of the same type material. Weight of zinc coating shall be 1.6 ounces per square foot or greater.

2. End, corner and pull posts shall conform to the following requirements:

   a. Fences five feet and less in height; Type I, Class I, 2.374 inch diameter, weighing 3.65 pounds per foot or Type I, Class 3, 2.374 inch diameter, weighing 1.264 pounds per foot.

   b. Fences over five feet in height; Type I, Class I, 2.875 inch diameter, weighing 5.79 pounds per foot or Type I, Class 3, 2.875 inch diameter weighing 2.00 pounds per foot.

3. Line posts shall conform to the following requirements:

   a. Fabric five feet and less in height; Type I, Class 4, 1.875 inch x 1.675 inch H-beam weighing 2.70 pounds per foot or Type I, Class 6, 2.875 inch x 1.675 inches, H-beam weighing 0.91 pounds per foot, or Type I, Class I, 1.90 inch diameter weighing 2.72 pounds per foot, or Type I, Class 3, 1.90 inch diameter, weighing 0.94 pounds per foot or 1.875 inch C Section yield strength 50,000 psi, weighing 2.34 pounds per foot.

   b. Fabric over five feet in height; Type I, Class 4, 2.625 inch diameter, H-beam weighing 4.1 pounds per foot or Type I, Class 6, 2.625 inch H-beam weighing 1.25 pounds per foot, or Type I, Class I, 2.375 inch diameter, weighing 3.65 pounds per foot, or Type I, Class 3, 2.375 inch diameter, weighing 1.25 pounds per foot or C Section as specified herein above.

4. Gate posts shall be in accordance with Table III, FS-RR-F-191/3a.

5. Gate frames FS-RR-F-191/2a as modified herein, shall be Type I, and Type III, 1.90 inch diameter, weighing 2.72 pounds per foot or 2.00 inch square, weighing 2.60 pounds per foot.

6. Top Rail and braces, F-RR-F-191/3a as modified herein, shall be Type II, Class I, 1.66 inch diameter, weighing 1.35 pounds per foot or Type II, Class 3, 1.66 inch diameter, weighing 0.786 pounds per foot. Fences with barbed wire above fabric may have a top tension wire in lieu of top rail.

7. Barbed wire shall conform to requirements of FS-RR-F221/1a.

8. Accessories shall conform to FS-RR-R191/4a as modified herein.

   a. Tension wire shall be #7 gauge coil spring wire.

c. Chain Link Fabric FS-RR-F-191/1a as modified herein.

1. Fabric shall be one of the following types as shown fabricated in a two inch mesh of 0.148 inch diameter wire:

   a. Type I, zinc-coated steel, minimum 1.8 ounces per square foot coating.

   b. Type II, aluminum coated steel, minimum 0.40 ounces per square foot coating.

   c. Type V, thermally bonded vinyl coated steel, Table III, 1200 pound minimum breaking load, precoat fabric with zinc coating minimum 0.30 ounces per square foot. Color shall be as indicated on the drawings or in the special provisions.

2. Fabric shall be barbed at top and bottom.

d. Padlocks

1. Padlocks shall conform to requirements of FS-FF-P-1016, keyed and master keyed, with two keys for each padlock and two master keys.

e. Concrete

1. Concrete shall be as specified.

f. Grout

1. Grout shall be non-shrink as approved by the Engineer.

III. Execution

a. Fence Installation

1. All necessary clearing, excavation and filling shall be performed as required to provide clear "line of Fence" runs.

2. Post shall be encased in concrete to the depth indicated, to the minimum limits contained herein and extended at least six (6) inches below the bottom of posts. Ten inches diameter of encasement shall be provided for line posts and twelve (12) inches diameter for end, corner, pull and gate posts.

   a. Fences five feet high and less: 2.5 foot encasement.

   b. Fences over five feet high: 3.0 foot encasement.

   c. Gate posts, six (6) foot swing and less: 3.0 foot encasement, twelve (12) inches diameter.

   d. Gate posts over six (6) foot swing, 3.0 foot encasement, sixteen (16) inches diameter.

3. Concrete shall be extended to two (2) inches above finished ground line at posts and smoothly sloped to drain away from the posts.

4. Posts shall be spaced at no more than ten (10) feet nor less than eight (8) feet on centers. Additional posts shall be spaced at

each abrupt change in grade.

5. Where rock is encountered, drill holes two (2) inches deeper than the depth shown or specified. The holes diameter shall be two (2) inches greater than the outside diameter of the post or the greatest dimension of the H Section. Fill the rock portion of the hole with grout with a ratio of 1:3 of cement and concrete sand.

6. Where fence is to be located on concrete structures a section of twelve (12) inch long, steel pipe shall be cast into the concrete at the correct location for the fence posts. The fence post shall be grouted into the steel pipe with s non-shrink grout as previously specified.

7. Corner or pull posts shall be installed at each horizontal or vertical angle point of fifteen (15) degrees or more and at no more than 500 foot intervals. Corner, end and pull posts shall be provided with a horizontal brace and tie rod on each side of the posts extending to and connecting to adjacent line posts.

8. After posts are installed and concrete has set firmly, the top rail and bottom tension wire shall be placed and securely anchored at ends and to line posts before the fabric is hung.

9. Tension wire shall be placed approximately six (6) inches above grade.

10. A brace shall be provided for gate posts, and at each corner, pull and end post for fabric heights of six (6) feet or greater.

11. Ends of fabric by the use of tension bars threaded through loops in the fabric, and secured to the posts by means of bands with bolts and nuts. Bands shall be as specified in FS-RR-F-191/4a.

12. Fabric shall be placed by securing one end and applying sufficient tension by means of mechanical fence stretchers to remove slack before fastening. The fabric shall be fastened to the post at intervals of not more than fifteen (15) inches on center, and to the top rails and bottom tension wire at intervals of not more than twenty-four (24) inches. All attachments shall be made with tie wires.

13. The bottom of the fabric shall be held as uniformly as possible to two (2) inches above finished grade.

14. Where indicated, three strands of barbed wire shall be provided above fence fabric. Stretch the strands to remove sag and anchor firmly to the extension arms. The extension arms on line posts shall be inclined away from the County property at approximately a 45° angle. Extension arms on corner posts and gates shall be vertical.

15. Fence gates and gate stops shall be installed as shown.

16. Gate posts shall be accurately set in concrete so that the plunger can be fully engaged.

17. Padlocks and chains shall be furnished where indicated.

18. The following alternate method of post anchorage will be acceptable:

    a. Drive post into ground and hold rigidly in position by means of two (2) steel angle anchors driven diagonally and attached to the post on opposite sides.

    b. Anchors, attachments and methods shall be in accordance with MSHA standard details.

b. Defective Work

1. Fencing which is improperly located and not true to line and grade and posts not plumb shall be removed and replaced.

2. Damaged galvanizing of components shall be repaired by thoroughly wire brushing the damaged area to remove loose and cracked zinc coating, and painting with two (2) coats of zinc dust, zinc oxide primer, MIL-P-21035. The first coat shall be allowed to dry thoroughly before the second coat is applied.

3. Damaged, aluminum coated components shall be repaired by cleaning as specified above, and painting with two (2) coats of aluminum paint, FS-TT-P-38.

THURMONT STANDARD
CURB AND GUTTER

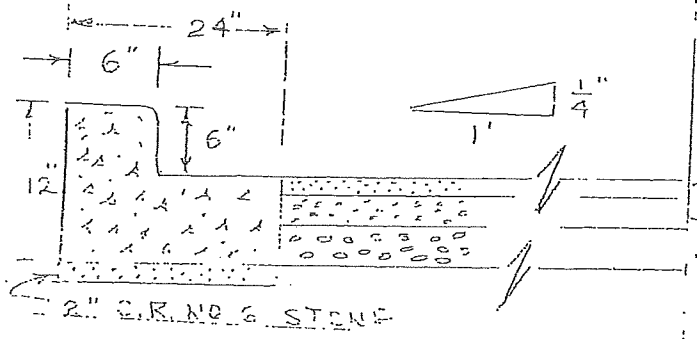

COMPACTED SUB-GRADE

STREET SHALL HAVE A FINISHED ℄ GRADE OF 1/4" PER FOOT OF FALL FROM ℄ OF ROAD TO THE TOP EDGE OF GUTTER

1" ST. BITUMINOUS CONCRETE

2" SN-BITUMINOUS CONCRETE

2"-BI-BITUMINOUS CONCRETE

— NOTE —

IF STREET IS CONSTRUCTED OVER UTILITY DITCHES APPLY 1" ST 1 YEAR LATER

Commissioners of Thurmont	INSTALLATION CURB & GUTTER AND PAVED STREETS	DETAIL No. 400

"TEMPORARY" REPAIR OVER DITCH

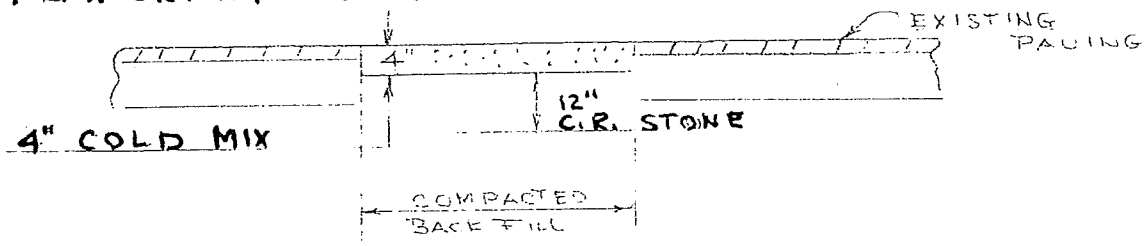

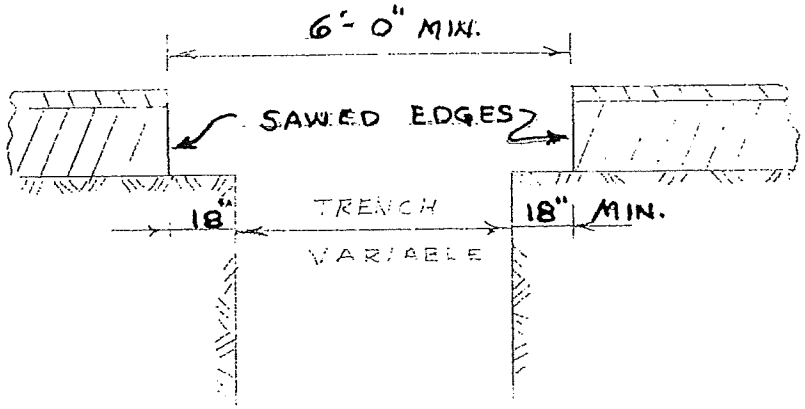

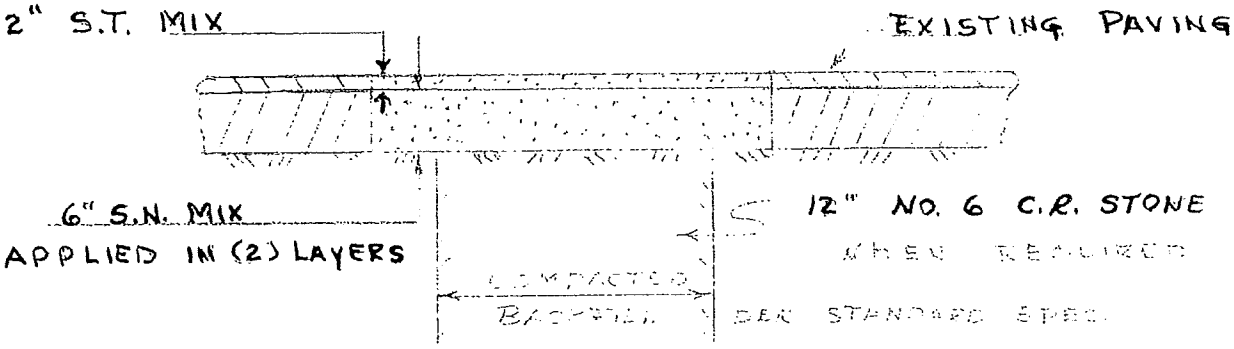

BITUMINOUS ROADWAY

Commissioners of Thurmont, Md.	MUNICIPAL STREET REPAIR OVER WATER & SEWER TRENCHES	DETAIL NO. 401 DATE: 6-2-82

ALTERNATE SURFACE TREATMENT FOR PARKING LOTS

3" Bituminous Concrete

3" Dense Graded Aggregate

Approved Compacted Subgrade

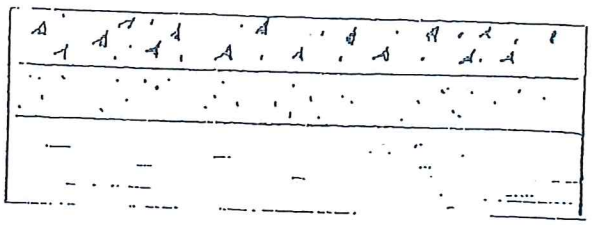

If subgrade does not meet compaction test, then additional depth of dense graded aggregate must be compacted.

Approved by the Commissioners of Thurmont: Marion W. Rice
Supt of Public Works

March 2, 1976

Commissioners
of
Thurmont, Md.

SURFACE TREATMENT
FOR PARKING LOTS
ALTERNATE METHOD

DETAIL
NO.
402

Contractor's Construction Cut Sheet

Contract No. | Project: | Date:

Type of Pipe | By:

Water _____ Sewer _____ | Chkd.:

Bench Marks:

Plan View

All elev. to highest point of hub.

Station	Invert Slope	% Slope	Stakeout Data			Construction Data		Remarks
			Offset	Top of Stake Elev.	Cut to Invert	Ground Elev.	Cut to Invert	

Date: 6-2-82

DETAIL NO. 40

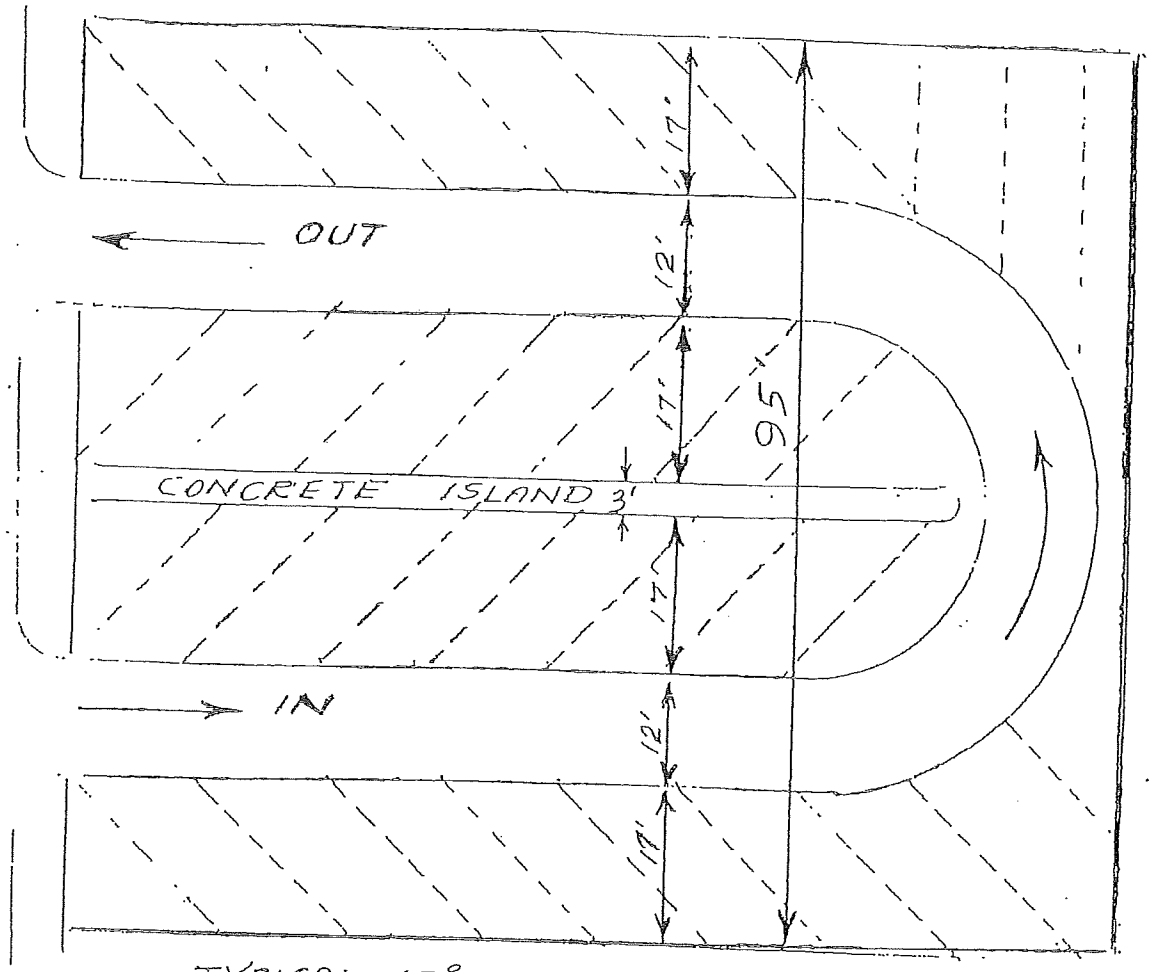

TYPICAL 45° ANGLE PARKING (28 SPACES)
4 ROWS OF SPACES - ENTRANCE & EXIT
AT ONE END ONLY
SIZE OF LOT REQUIRED 115' X 100'

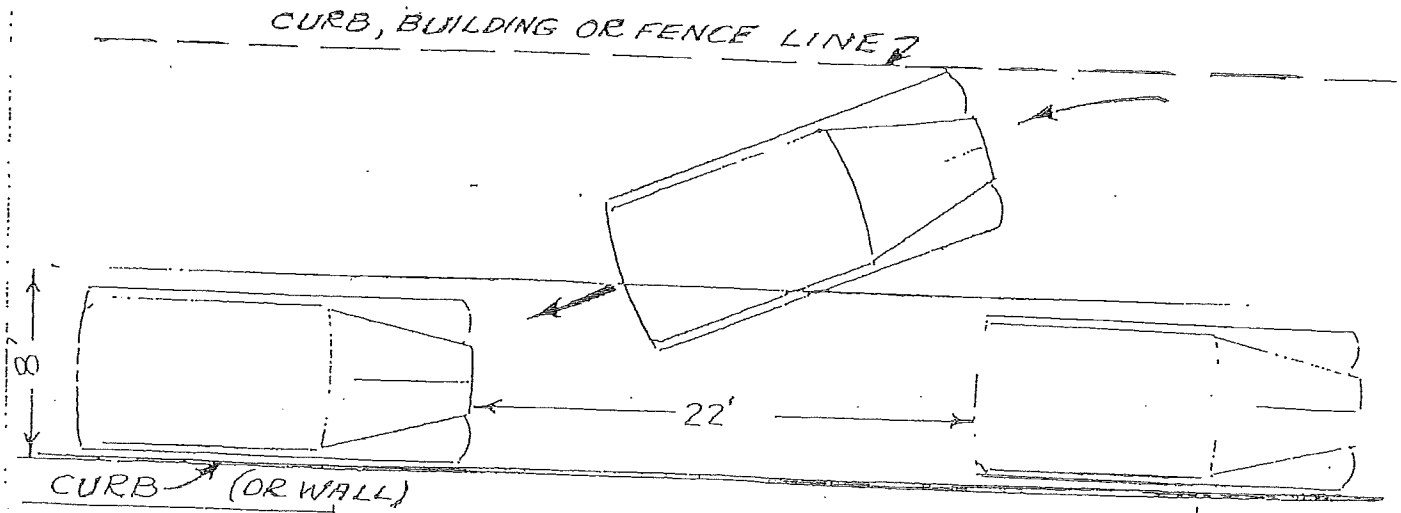

Commissioners
of
Thurmont, Md.

PARALLEL PARKING

NOTE - WIDTH REQUIRED FOR 2 ROWS
PARALLEL PARKING 27'.

DETAIL
NO.
404

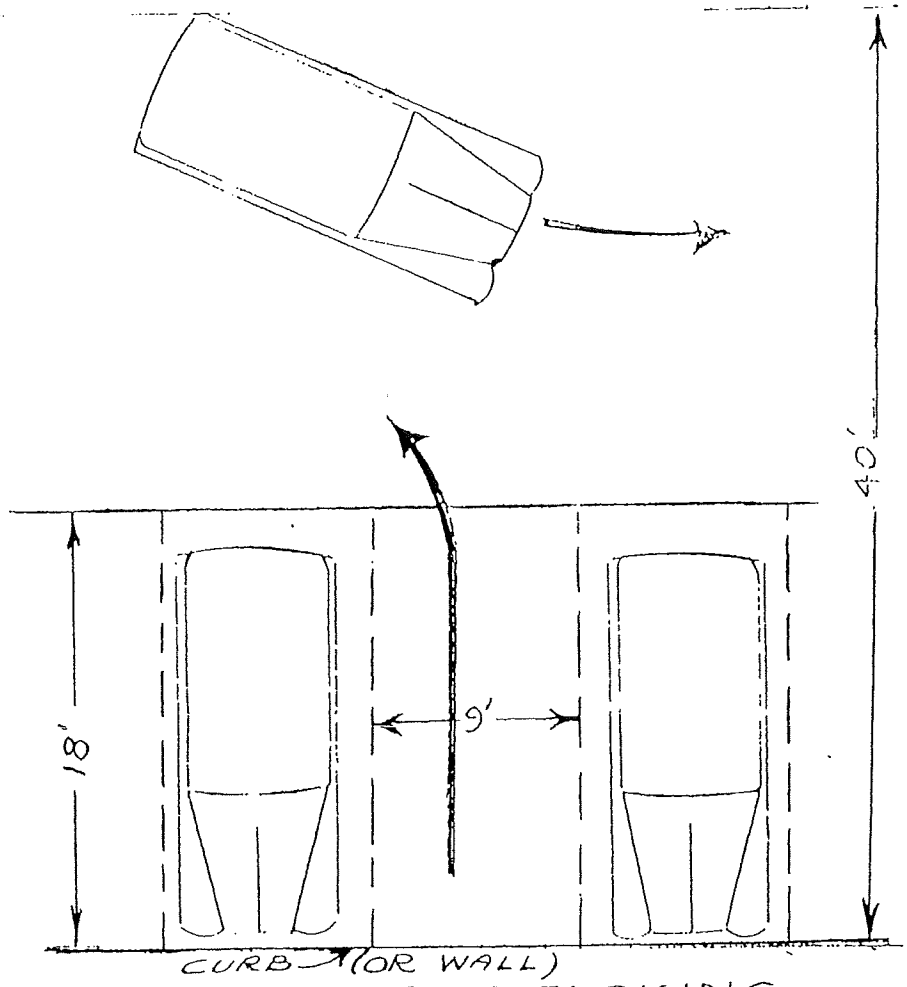

RIGHT ANGLE PARKING

9'-0"-WIDTH OF STALLS

NOTE- WIDTH REQUIRED FOR 2 ROWS - RIGHT ANGLE PARKING 58'

Commissioners of Thurmont, Md.	RIGHT ANGLE PARKING	DETAIL NO. 405

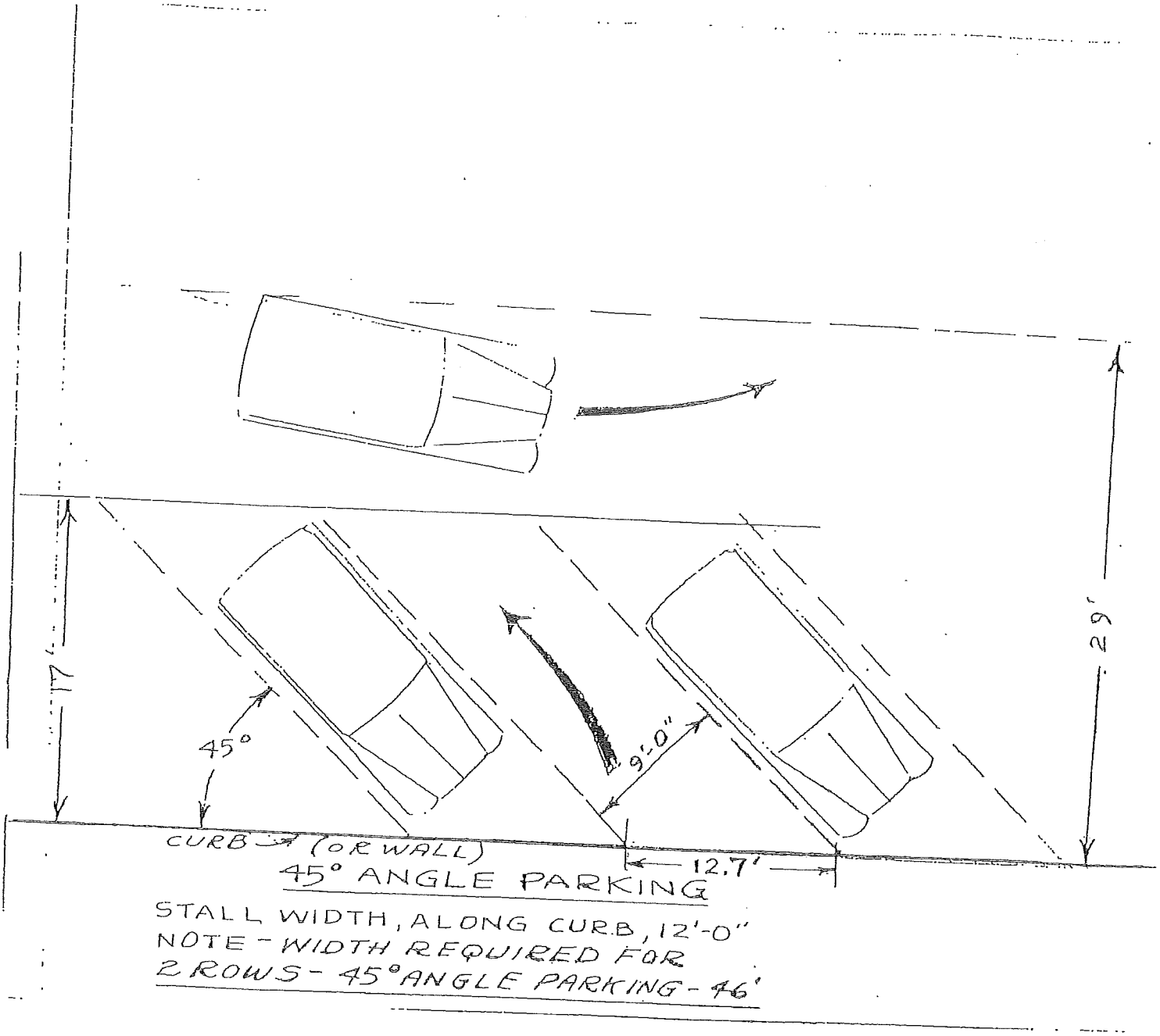

Commissioners
of
Thurmont, Md.

45° ANGLE
PARKING

DETAIL
NO.
A06

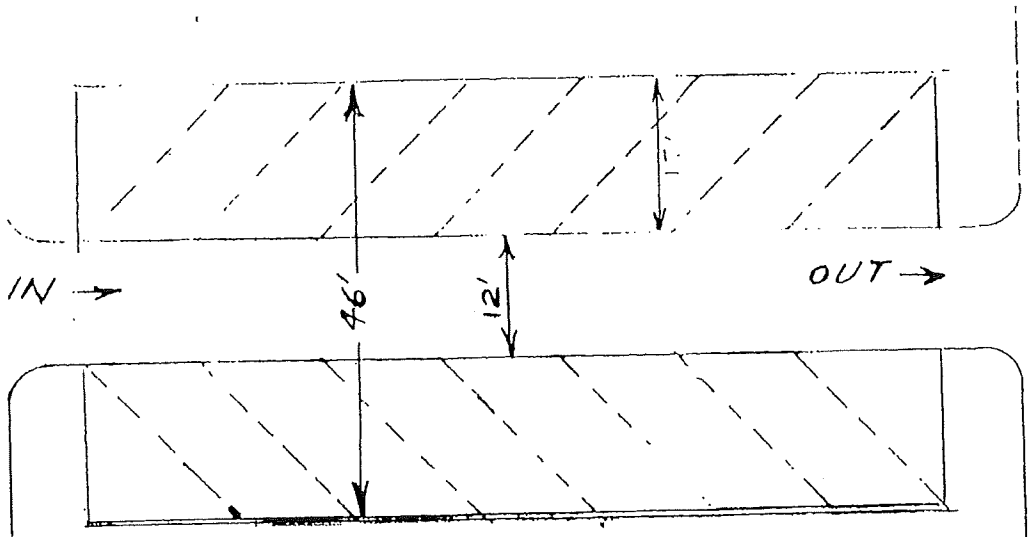

TYPICAL 45° ANGLE PARKING (12 SPACES)
SIZE OF LOT REQUIRED 50'X100'

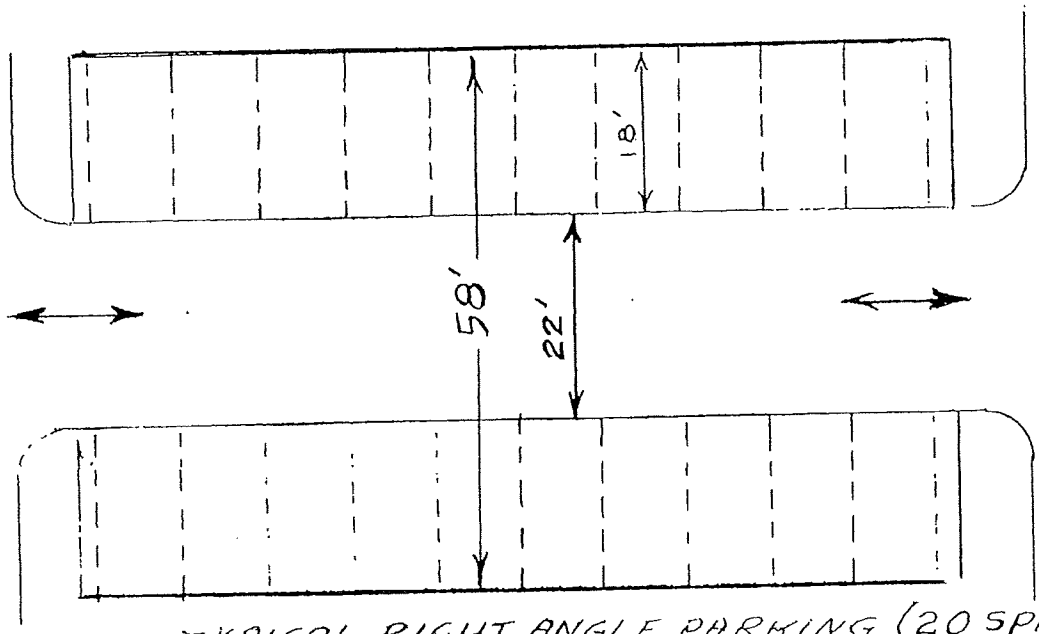

TYPICAL RIGHT ANGLE PARKING (20 SPACES)
SIZE OF LOT REQUIRED 60'X100'

Commissioners
of
Thurmont, Md.

RIGHT ANGLE
PARKING
DOUBLE ROW

DETAIL
NO.
407
DATE 6-1-82

SPACE REQUIRED FOR PARKING CARS

Dimensions given are minimum, consistent with safe parking and movement.

STREET SPACE USED FOR CURB PARKING					
Angle of Parking At Curb	Width of Street Used When Parked	Width Needed For Parking Plus Maneuvering	Length of Curb Per Car		Cars Parked Per 100'
			8.0'	9.0'	
PARALLEL	7'	19'	22.0'	22.0'	4.6
45 DEGREES	17'	29'	11.3'	12.7'	8.8
60 DEGREES	18'	36'	9.2'	10.4'	10.8
90 DEGREES	17'	40'	8.0'	9.0'	12.5

Approved 9/1/71
The Commissioners of Thurmont

Commissioners
of
Thurmont, Md.

CAR SPACES
DIMENSIONS

DETAIL
NO.
408

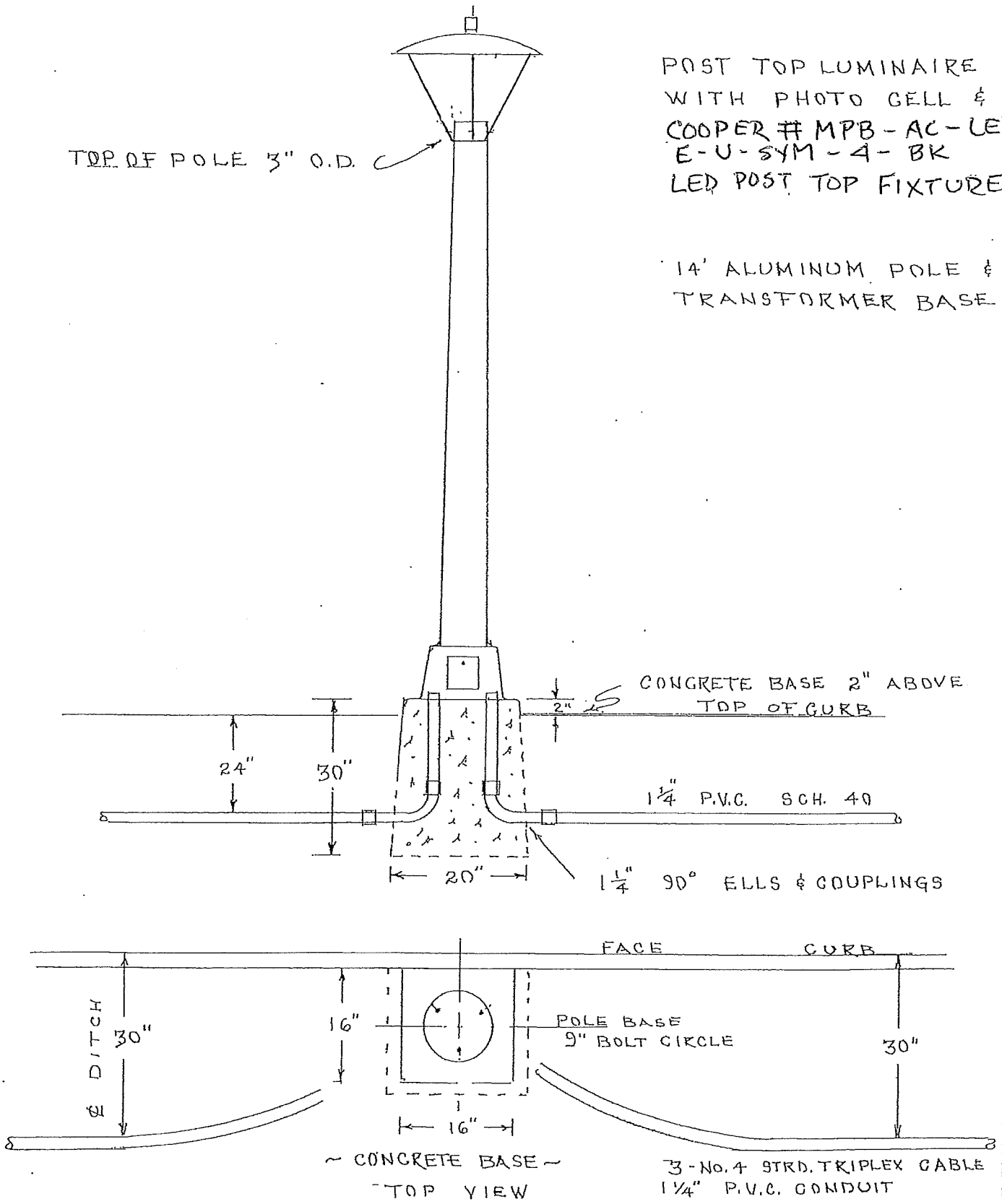

COMMISSIONERS OF THURMONT MD. APPROVED 11-6-85	STREET LIGHT INSTALLATION 55W LED FIXTURE	DETAIL NO. 409 REVISED 7/15

SCHEDULE OF PRICES

NOTE - THIS PROPOSAL SHALL BE FILLED IN BY THE BIDDER, WITH THE PRICES WRITTEN IN WORDS AND NUMERALS, AND THE EXTENSIONS SHALL BE MADE BY HIM. FOR COMPLETE INFORMATION CONCERNING THESE ITEMS SEE SPECIFICATIONS, SPECIAL PROVISIONS, AND CONTRACT FORM.

Item	Estimated Quantities	Description	Unit Price Dollars	Unit Price Cents	Total Price Dollars	Total Price Cents

TAIL

#410

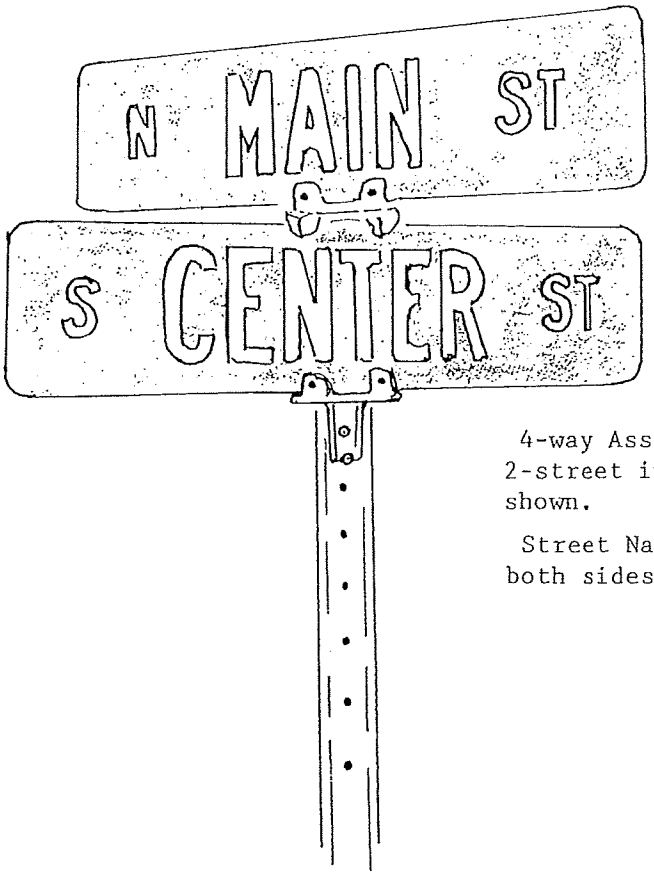

4-way Assembly For
2-street intersection
shown.

Street Name is on
both sides of each plate.

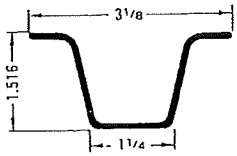

2 lbs. per Ft.

SPECIFICATIONS

Plates: Alodized aluminum, .080 thickness, 6" high by 24" or 30" wide as necessary. Thermo-setting acrylic baked enamel. Color: green.

Copy: Letters to be white reflectorized. 4 inch standard alphabet, Upper Case letters. Prefix and suffix abbreviations are 2 inch standard alphabet. Equal to Sargent-Sowell catalog #45-012.

Hardware: Smooth surfaced die cast aluminum. Zinc plated standard set screws. Brackets to be polished die cast aluminum equal to Sargent-Sowell, Inc. catalog # 45-419. Four-way assembly requires 90 degree bracket equal to Sargent-Sowell, Inc. catalog number 45-411.

Posts: High strength, 2 lb. per ft, channel post, 10 ft. green baked enamel. 3/8" holes on 1" centers, equal to Sargent-Sowell Catalog #03-112.

Commissioners of Thurmont	Revisions Date:	Note:	STREET NAME SIGNS	Detail No. 411
				Date: 8/4/86

COMMISSIONERS OF THURMONT POLICY FOR DEVELOPERS

COVERING

INSTALLATION OF UTILITIES IN A SUBDIVISION

1. PREPARE PLANS AND SPECIFICATIONS TO CONFORM WITH THE TOWN OF THURMONT CONSTRUCTION SPECIFICATIONS.
   A. PLANS TO SHOW LIMITS OF CONTRACTS.

2. PREPARE CONTRACT DOCUMENTS USING THURMONT STANDARDS OR EQUAL. DOCUMENTS SHALL INCLUDE:
   A. TIME LIMIT FOR COMPLETION OF CONTRACT (_____CALENDAR DAYS).
   B. PERFORMANCE, LABOR AND MATERIAL BONDS FURNISHED BY CONTRACTOR TO REMAIN IN EFFECT FOR TWELVE (12) MONTHS AFTER THE COMPLETION OF PHASE I OF ORIGINAL CONTRACT.
   C. BID SHEET USING THURMONT STANDARD.
   D. LIQUIDATED DAMAGES, CHARGED TO CONTRACTOR FOR FAILURE TO COMPLETE CONTRACT ON SPECIFIED TIME AS STATED IN CONTRACT.
   E. SHOP DRAWINGS (IF REQUIRED).

3. CONSTRUCTION PERMIT
   A. MAKE APPLICATION AND SEND PLANS AND SPECIFICATIONS TO THE ENVIRONMENTAL HEALTH ADMINISTRATION FOR APPROVAL OF A CONSTRUCTION PERMIT FOR ALL WORK IN ACCESS OF 400 FEET IN LENGTH OF ANY WATER OR SEWER FACILITIES.

4. PAYMENT TO CONTRACTOR:
   A. THE TOWN INSPECTOR AND SUPERINTENDENT OF PUBLIC WORKS SHALL APPROVE ALL ESTIMATES SUBMITTED EACH MONTH IN ACCORDANCE WITH THE CONTRACT DOCUMENTS FOR LABOR AND MATERIALS THAT ARE INSTALLED AND APPROVED, IN PLACE. DEVELOPER SHALL BE RESPONSIBLE FOR PAYMENT TO CONTRACTOR.

5. CHANGES IN WORK:
   A. NO CHANGE ORDERS SHALL BE APPROVED WITHOUT WRITTEN CONSENT OF BOTH THE DEVELOPER AND THE SUPERINTENDENT OF PUBLIC WORKS.

6. SECURITIES:
   A. A LETTER OF CREDIT OR BOND SHALL BE GIVEN TO THE COMMISSIONERS OF THURMONT IN THE AMOUNT OF 125% OF CONTRACT TO GUARANTEE THE COMPLETION OF CONTRACT. SECURITIES SHALL REMAIN IN EFFECT FOR ONE (1) YEAR AFTER THE FIRST PHASE OF CONTRACT HAS BEEN COMPLETED. LETTER OF CREDIT OR BOND CAN BE REDUCED TO COVER UNFINISHED IMPROVEMENTS PLUS 25%.