COMMISSIONERS OF THURMONT POLICY FOR DEVELOPERS

COVERING

INSTALLATION OF UTILITIES IN A SUBDIVISION

1. PREPARE PLANS AND SPECIFICATIONS TO CONFORM WITH THE TOWN OF THURMONT CONSTRUCTION SPECIFICATIONS.
   A. PLANS TO SHOW LIMITS OF CONTRACTS.

2. PREPARE CONTRACT DOCUMENTS USING THURMONT STANDARDS OR EQUAL. DOCUMENTS SHALL INCLUDE:
   A. TIME LIMIT FOR COMPLETION OF CONTRACT (_____CALENDAR DAYS).
   B. PERFORMANCE, LABOR AND MATERIAL BONDS FURNISHED BY CONTRACTOR TO REMAIN IN EFFECT FOR TWELVE (12) MONTHS AFTER THE COMPLETION OF PHASE I OF ORIGINAL CONTRACT.
   C. BID SHEET USING THURMONT STANDARD.
   D. LIQUIDATED DAMAGES, CHARGED TO CONTRACTOR FOR FAILURE TO COMPLETE CONTRACT ON SPECIFIED TIME AS STATED IN CONTRACT.
   E. SHOP DRAWINGS (IF REQUIRED).

3. CONSTRUCTION PERMIT
   A. MAKE APPLICATION AND SEND PLANS AND SPECIFICATIONS TO THE ENVIRONMENTAL HEALTH ADMINISTRATION FOR APPROVAL OF A CONSTRUCTION PERMIT FOR ALL WORK IN ACCESS OF 400 FEET IN LENGTH OF ANY WATER OR SEWER FACILITIES.

4. PAYMENT TO CONTRACTOR:
   A. THE TOWN INSPECTOR AND SUPERINTENDENT OF PUBLIC WORKS SHALL APPROVE ALL ESTIMATES SUBMITTED EACH MONTH IN ACCORDANCE WITH THE CONTRACT DOCUMENTS FOR LABOR AND MATERIALS THAT ARE INSTALLED AND APPROVED, IN PLACE. DEVELOPER SHALL BE RESPONSIBLE FOR PAYMENT TO CONTRACTOR.

5. CHANGES IN WORK:
   A. NO CHANGE ORDERS SHALL BE APPROVED WITHOUT WRITTEN CONSENT OF BOTH THE DEVELOPER AND THE SUPERINTENDENT OF PUBLIC WORKS.

6. SECURITIES:
   A. A LETTER OF CREDIT OR BOND SHALL BE GIVEN TO THE COMMISSIONERS OF THURMONT IN THE AMOUNT OF 125% OF CONTRACT TO GUARANTEE THE COMPLETION OF CONTRACT. SECURITIES SHALL REMAIN IN EFFECT FOR ONE (1) YEAR AFTER THE FIRST PHASE OF CONTRACT HAS BEEN COMPLETED. LETTER OF CREDIT OR BOND CAN BE REDUCED TO COVER UNFINISHED IMPROVEMENTS PLUS 25%.

# TOWN OF THURMONT

## PUBLIC WORKS DEPARTMENT

# STANDARD DETAILS

## FOR

## WATER MAINS, SANITARY SEWER, STREETS AND RELATED STRUCTURES

MARION W. RICE
SUPT. PUBLIC WORKS

MAY 1982
REVISED 2012

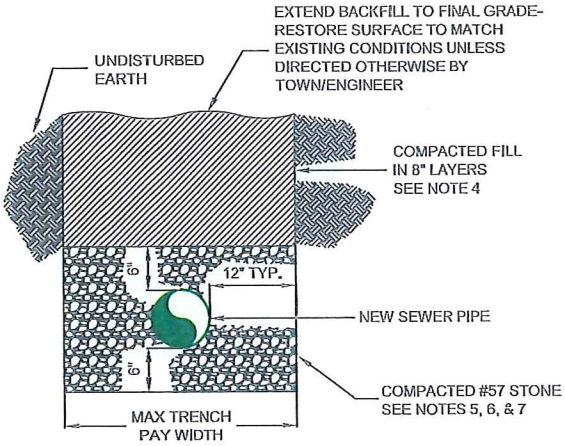


## PIPE BEDDING FOR SERVICE LATERALS (4" AND 6" PIPE, ANY PIPE MATERIALS)

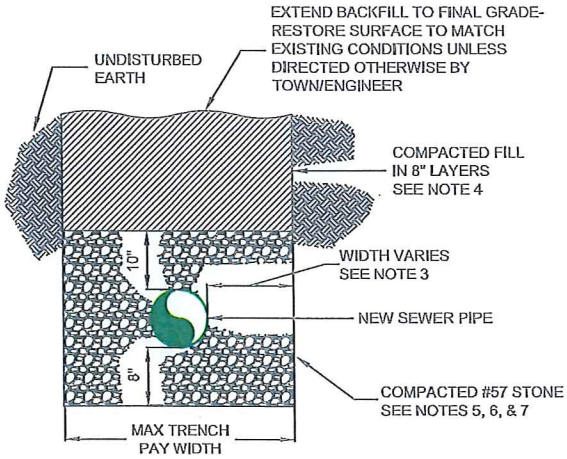


## PIPE BEDDING FOR PVC PIPE (8" AND LARGER)

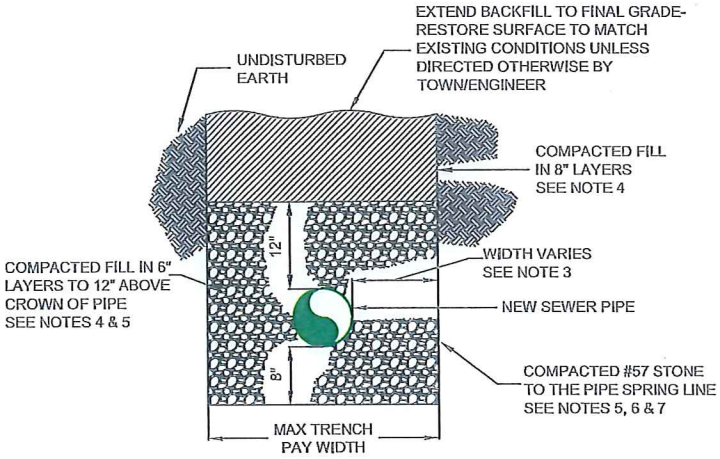


## PIPE BEDDING FOR DUCTILE IRON PIPE (8" AND LARGER)

NOTES:

1. PIPE BEDDING DETAIL APPLIES TO ALL NEW SEWER PIPES INSTALLED.

2. THE CONTRACTOR SHALL USE A TRENCH BOX OR SHEETING AND SHORING IN ACCORDANCE WITH OSHA REGULATIONS WHILE INSTALLING NEW SEWERS. THE CONTRACTOR WILL NOT BE ALLOWED TO SLOPE TRENCH WALLS.

3. TRENCH WIDTH SHALL BE LIMITED TO AND THE CONTRACTOR SHALL ONLY BE PAID FOR THE FOLLOWING UNLESS OTHERWISE APPROVED IN WRITING BY TOWN/ENGINEER:
   - 4" AND 6" PIPE - 12" EACH SIDE
   - 8" TO 15" PIPE - 15" EACH SIDE
   - 16" TO 30" PIPE - 18" EACH SIDE

4. IN GRASSED AREAS, COMMON FILL MAY BE USED AS BACKFILL. IN MD SHA, COUNTY AND TOWN PAVED ROADS, CR-6 SHALL BE IMPORTED AND USED AS BACKFILL. REMOVE ALL EXCAVATED MATERIAL AND DISPOSE OFFSITE.

5. COMPACTION OF STONE AND COMMON FILL TO 12" ABOVE PIPE TO BE WITH "JUMPING JACK" HAND MECHANICAL TAMPS ONLY.

6. MAINTAIN GROUND WATER LEVEL AT LEAST 1 FOOT BELOW THE BOTTOM OF THE STONE BEDDING AT ALL TIMES.

7. IN ROCK, REDUCE STONE BEDDING UNDER PIPE AND STRUCTURES TO 6 INCHES.

TOWN OF THURMONT
FREDERICK COUNTY, MD

PIPE BEDDING DETAILS

| No. | Date | By | Revision | Scale | Approved By | Date | DETAIL NO. |
|---|---|---|---|---|---|---|---|
| | | | | | | | 100 |

# MANHOLE SCHEDULES

| MH DIAMETER | LARGEST PIPE DIAMETER | PIPE DIAMETER | MAX MH SPACING |
|---|---|---|---|
| 4 FEET | 8" TO 15" | 8" TO 12" | 400 FEET |
| 5 FEET | 16" TO 27" | 15" TO 27" | 450 FEET |

| DETAIL NO. | MANHOLE TYPE | WHEN IN USE |
|---|---|---|
| 102 | PRECAST WITH CONE SECTION | 1. USE FOR 4-FOOT AND 5-FOOT DIAMETER MANHOLES ONLY<br>2. MANHOLES WILL TERMINATE AT GRADE IN LANDSCAPED AREAS AND 16 TO 24 INCHES ABOVE GRADE IN EASEMENT AREAS AS DIRECTED BY OWNER/ENGINEER |
| 103 | PRECAST WITH FLAT TOPS | 1. USE FOR SHORT MANHOLES (4-FOOT AND 5-FOOT) WHERE A CONE SECTION WILL NOT WORK, OR AS DIRECTED BY OWNER/ENGINEER. |

MANHOLE COVER ELEVATIONS

1. 1/2" BELOW FINAL PAVED SURFACES.
2. FLUSH WITH FINISHED GRADE IN LANDSCAPED/LAWN AREAS UNLESS OTHERWISE SPECIFIED.
3. 16 INCHES ABOVE GRADE IN EASEMENTS EXCEPT TO ACCOMMODATE FLOOD ELEVATIONS.
4. COVERS TO TERMINATE AT LEAST 1 FOOT ABOVE THE 100-YEAR FLOOD ELEVATION BUT NO GREATER THAN 4 FEET ABOVE GRADE TOTAL. WHERE THE FLOOD ELEVATION IS 4 FEET OR MORE ABOVE GROUND, WATERTIGHT COVERS SHALL BE USED. THE MANHOLE COVER SHALL TERMINATE 2 FEET ABOVE GRADE, AND A VENT PIPE SHALL BE INSTALLED TO 2 FEET ABOVE THE 100-YEAR FLOOD ELEVATION.

# GENERAL SPECIFICATIONS AND REQUIREMENTS

1. MANHOLE TO CONFORM WITH ASTM C478 EXCEPT AS MODIFIED BELOW.
2. MANHOLE BASE TO BE REINFORCED WITH A MINIMUM OF 0.20 SQUARE INCHES PER LINEAL FOOT EACH WAY. WALL REINFORCING TO BE MINIMUM OF 0.12 SQUARE INCHES PER LINEAL FOOT. EITHER TONGUE OR GROOVE SHALL HAVE REINFORCING EQUAL IN AREA TO MINIMUM WALL SECTION.
3. ALL JOINTS SHALL CONFORM WITH ASTM C443.
4. STEPS TO BE PLASTIC PER SPEC SECTION 02700.
5. ALL PIPE OPENINGS TO BE NO GREATER THAN 3" LARGER THAN OUTSIDE DIAMETER OF PIPE ALL AROUND AND ADDITIONALLY REINFORCED WITH A MINIMUM OF 0.20 SQUARE INCHES OF STEEL AT 90 DEGREES (ADDITIONAL REINFORCING NOT REQUIRED FOR CORED OPENINGS).
6. ALL SURFACES SHALL BE SMOOTH, EVEN TEXTURED WITH A MINIMUM OF HONEYCOMB, FINS, AND OTHER IMPERFECTIONS. THE ENGINEER OR OWNER REPRESENTATIVE RESERVES THE RIGHT TO REJECT MANHOLES.
7. NON-PENETRATING LIFTING HOLES SHALL BE PLUGGED WITH EXPANSION GROUT. PENETRATING LIFTING HOLES SHALL NOT BE ALLOWED.
8. PIPES SHALL BE CONNECTED TO MANHOLES WITH FLEXIBLE RUBBER BOOT CONNECTORS AS SHOWN IN THE DETAILS. WHERE REQUIRED AND/OR NECESSARY, CORED HOLES FOR SEWERS MAY BE USED. FOR CORED HOLES, FILL VOIDS WITH NON-SKRINK GROUT PER DETAIL NO 116.
9. STEPS TO BE OVER WIDEST PORTION OF BENCH.
10. BENCHING AND INVERT CHANNELS SHALL BE PRECAST BY THE MANHOLE MANUFACTURER. FORMED AND POURED IN PLACE BENCHES AND INVERTS MAY BE APPROVED IN CERTAIN SITUATIONS BY THE ENGINEER AND SHALL BE USED WHERE SPECIFICALLY REQUIRED SUCH AS FOR A DOGHOUSE MANHOLE. BENCHING CONCRETE SHALL BE MIN. 4000 PSI AND FIBER REINFORCING FOR POURED-IN-PLACE BENCHING. BENDS IN BENCH SHALL BE DESIGNED TO ALLOW A 3 FOOT LONG CAMERA TO EASILY ENTER THE SEWER PIPE. FOR PRECAST INVERTS, THE CONTRACTOR SHALL BE RESPONSIBLE FOR DETERMINING EXACT INVERT ELEVATIONS PRIOR TO MANUFACTURING THE MANHOLE INCLUDING WHERE CONNECTING TO EXISTING SEWERS. SEE DETAIL NO. 102 FOR ADDITIONAL REQUIREMENTS.
11. ALL MANHOLE SECTIONS SHALL BE DESIGNED FOR H-20 LOADING.
12. MINIMUM HEIGHT FOR CONCENTRIC CONES ON MANHOLES WITH BOLT DOWN FRAME AND COVER IS 36".
13. MATCH PIPE CROWN ELEVATIONS OF CONNECTING/INFLUENT SEWERS AND MAIN SEWER.
14. VACUUM TEST MANHOLES PER THE SPECIFICATIONS.
15. ALL FRAMES SHALL BE BOLTED TO THE FLAT TOP OR CONE SECTION PER DETAIL NO. 107. TWO (2) COMPLETE CIRCLES OF MASTIC SHALL BE INSTALLED UNDER THE FRAME BEFORE SETTING ON THE CONE SECTION OR FLAT TOP.

TOWN OF THURMONT
FREDERICK COUNTY, MD

MANHOLE SCHEDULES AND GENERAL REQUIREMENTS

| No. | Date | By | Revision | Scale | Approved By | Date | DETAIL NO. |
|---|---|---|---|---|---|---|---|
| | | | | | | | 101 |

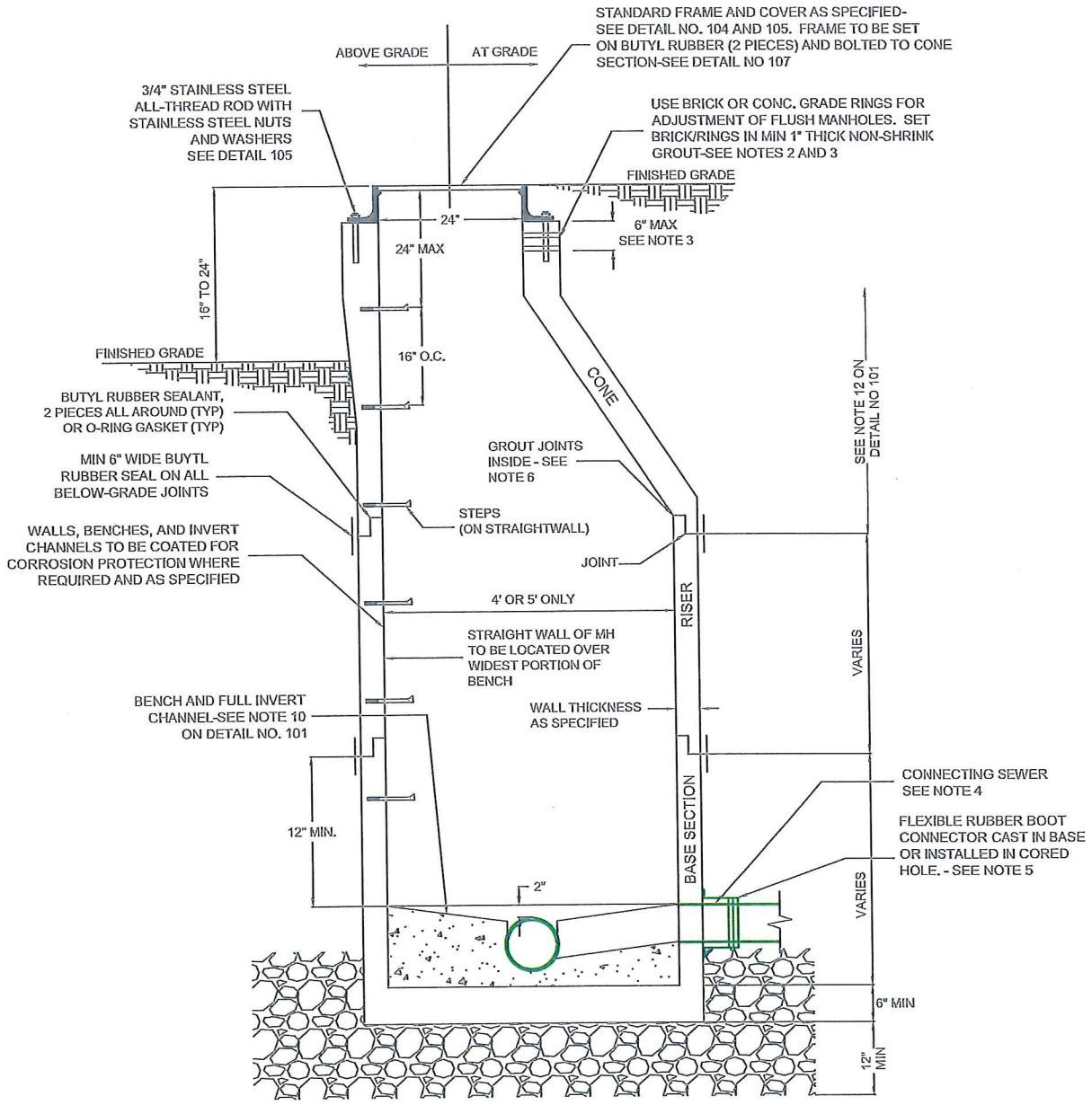


NOTES:

1. REFER TO DETAIL 101 FOR ALL MANHOLE REQUIREMENTS SCHEDULES.
2. NON-SHRINK GROUT SHALL COMPLETELY COVER THE BRICK/GRADE RINGS ON THE OUTSIDE, SHALL OVERLAP THE CONE SECTION A MINIMUM OF 6 INCHES AND SHALL COVER THE FRAME FLANGE COMPLETELY. SEE DETAIL NO. 107.
3. MANHOLE SHALL BE ORDERED WITH MINIMUM GRADE ADJUSTMENT. ORDER BASE, RISER, AND CONE HEIGHTS TO STACK OUT MANHOLE AS CLOSE AS POSSIBLE TO GRADE. CONTRACTOR TO SUPPLY ENGINEER WITH A SCHEDULE OF EACH MANHOLE SHOWING THE HEIGHTS OF EACH SECTION. MAXIMUM ADJUSTMENT SHALL BE 6 INCHES UNLESS APPROVED OTHERWISE. BRICK OR CONCRETE GRADE RINGS SHALL BE USED AS SPECIFIED. IF GRADE RINGS ARE USED, A SINGLE GRADE RING SHALL BE INSTALLED TO ACHIEVE THE REQUIRED ADJUSTMENT.
4. MATCH PIPE CROWN ELEVATIONS OF CONNECTING/INFLUENT SEWERS AND MAIN SEWER.
5. IF HOLE FOR PIPE MUST BE CORE DRILLED IN THE FIELD, REFER TO DETAIL 116 FOR REQUIREMENTS.
6. ALL JOINTS SHALL BE GROUTED INSIDE THE MANHOLE WITH NON-SHRINK, HYDROGEN SULFIDE RESISTANT GROUT.

TOWN OF THURMONT
FREDERICK COUNTY, MD

STANDARD PRECAST MANHOLES WITH CONE SECTIONS (4' AND 5' DIAMETER MANHOLES)

| No. | Date | By | Revision | Scale | Approved By | Date | DETAIL NO. |
|---|---|---|---|---|---|---|---|
| | | | | | | | 102 |

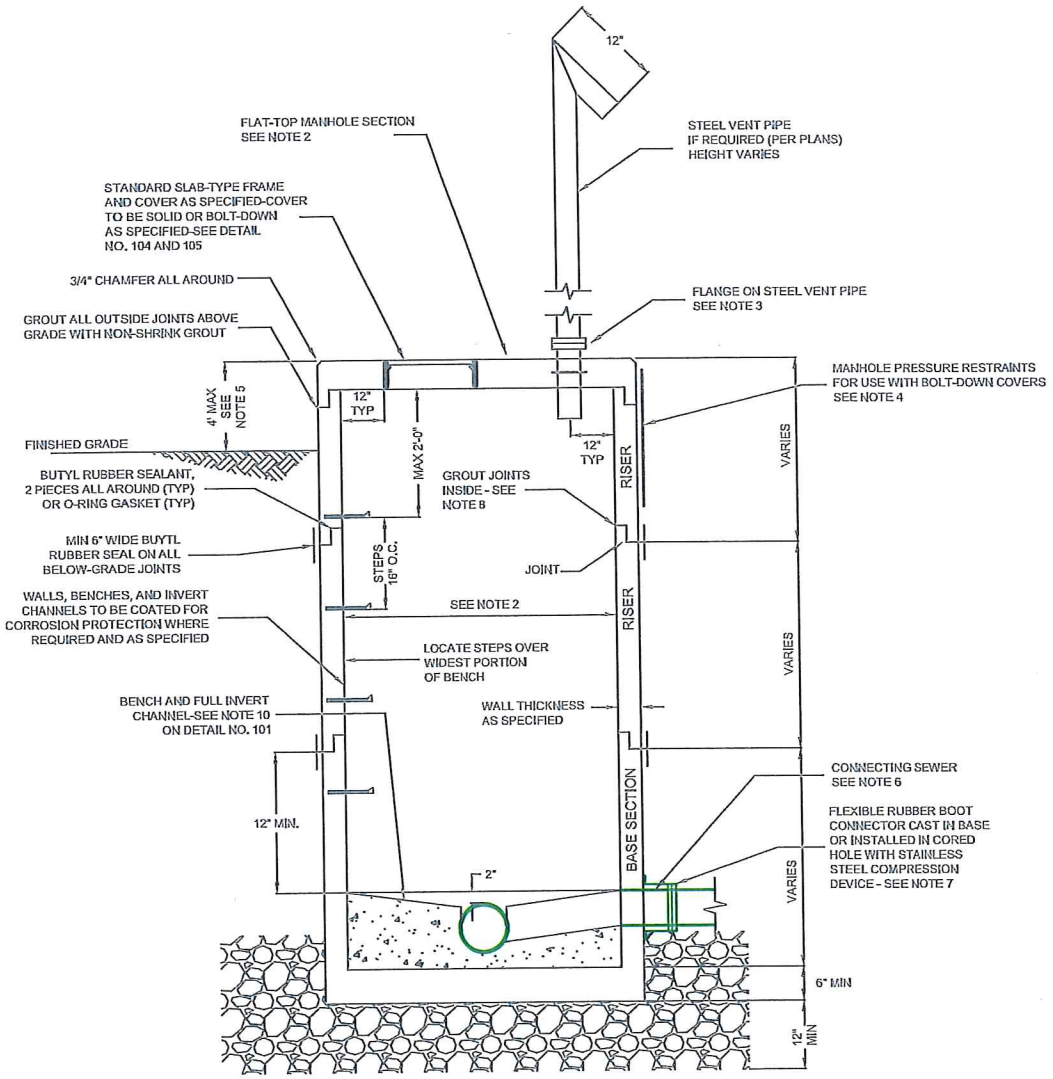


NOTES:

1. REFER TO DETAIL NO. 101 FOR ALL MANHOLE REQUIREMENTS AND SCHEDULES.

2. ALL 4-FOOT AND 5-FOOT MANHOLES TERMINATING MORE THAN 2 FEET ABOVE GRADE SHALL HAVE FLAT TOPS-SEE SCHEDULES ON DETAIL NO. 101. SLAB TYPE FRAMES AND COVERS SHALL BE THE STANDARD FOR FLAT TOPS-SEE DETAIL NOS. 104 AND 105. MINIMUM THICKNESS OF FLAT-TOPS SHALL BE 8" FOR 4-FOOT AND 5-FOOT DIAMETER MANHOLES.

   IN SOME INSTANCES, FLAT TOP MANHOLES WITH COVERS FLUSH WITH THE FINAL GRADE WILL BE REQUIRED, SUCH AS WHEN INSTALLING SHORT MANHOLES. IN THIS CASE, THE TOP SLAB ELEVATION SHALL BE BELOW THE FINAL GRADE ELEVATION AND A BUILT-UP TYPE FRAME AND COVER SHALL BE USED AND INSTALLED PER DETAIL NO. 107.

3. ALL FLAT TOP SECTIONS TERMINATING ABOVE GRADE SHALL BE FURNISHED WITH THE VENT PIPE STUB-OUT CAST INTO THE TOP SECTION UNLESS OTHERWISE APPROVED BY TOWN/ENGINEER. IF A VENT PIPE IS NOT SPECIFIED, INSTALL A BLIND FLANGE (SAME MATERIAL AS VENT PIPE) ON STU-BOUT-BOLT WITH STAINLESS STEEL HARDWARE.

4. PRESSURE RESTRAINTS ARE REQUIRED FOR ALL FLAT TOPS WITH WATERTIGHT COVERS UNLESS APPROVED OR DIRECTED. THREE RESTRAINTS SHALL BE EQUALLY SPACED AROUND THE MANHOLE. RESTRAINTS SHALL BE FLAT STEEL PLATES 3/8" X 3" X 24" LONG WITH A 7/8" HOLE 1-1/2" FROM EACH END. ANCHOR WITH 3/4" X 4" LONG GALV. STEEL ADHESIVE ANCHORS OR APPROVED EQUAL. RESTRAINTS TO BE HOT DIPPED GALVANIZED AFTER FABRICATION. AT LEAST 5 FEET OF VERTICAL RISER SHALL BE RESTRAINED-LENGHTEN BARS AS NECESSARY.

5. REFER TO MANHOLE SCHEDULES ON DETAIL NO. 101 FOR SPECIFIED COVER HEIGHTS ABOVE GRADE.

6. MATCH PIPE CROWN ELEVATIONS OF CONNECTING/INFLUENT SEWERS AND MAIN SEWER.

7. IF HOLE FOR PIPE MUST BE CORE DRILLED IN THE FIELD, REFER TO DETAIL 116 FOR REQUIREMENTS.

8. ALL JOINTS SHALL BE GROUTED INSIDE THE MANHOLE WITH NON-SHRINK, HYDROGEN SULFIDE RESISTANT GROUT.

TOWN OF THURMONT
FREDERICK COUNTY, MD

STANDARD PRECAST MANHOLES WITH FLAT TOP SECTIONS

| No. | Date | By | Revision | Scale | Approved By | Date | DETAIL NO. |
|---|---|---|---|---|---|---|---|
| | | | | | | | 103 |

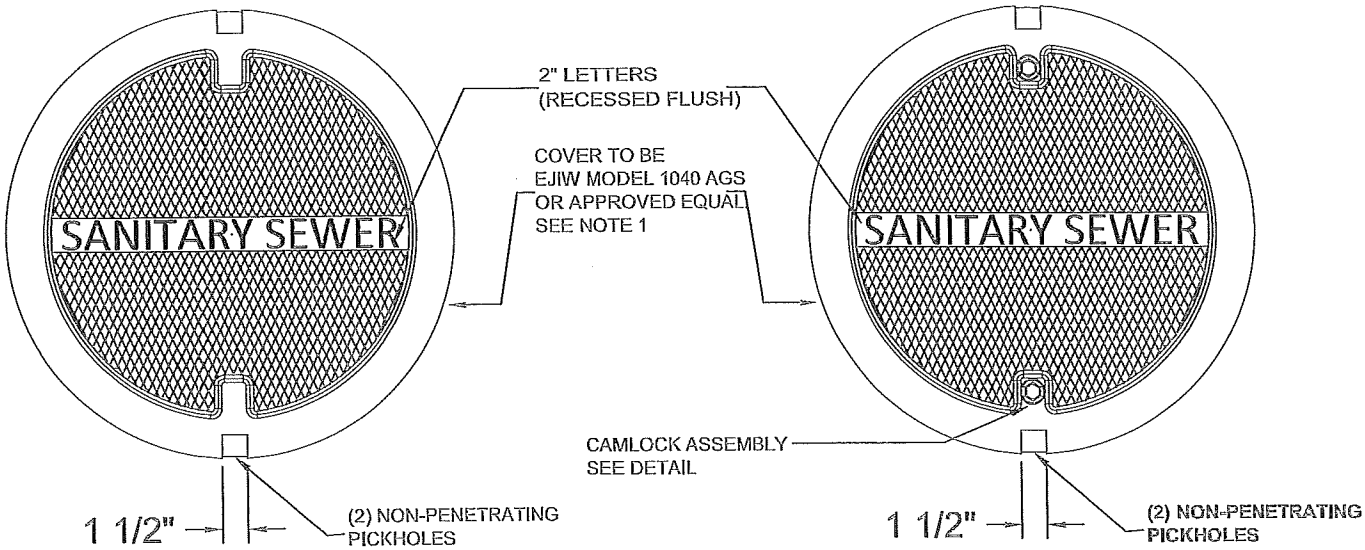


SOLID COVER (STANDARD)

WATERTIGHT COVER
(AS REQUIRED)

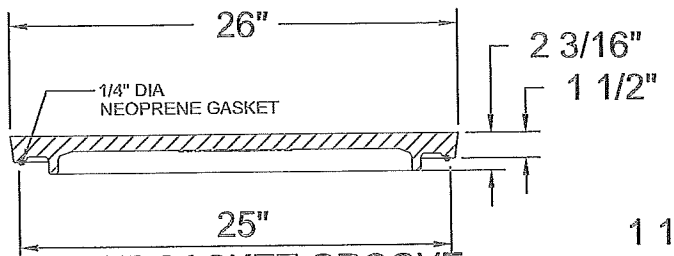


O.D. OF GASKET GROOVE

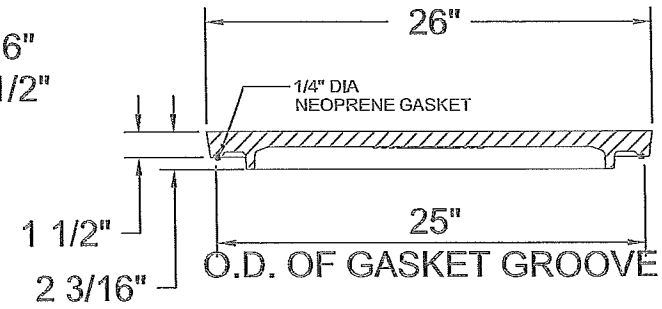


O.D. OF GASKET GROOVE

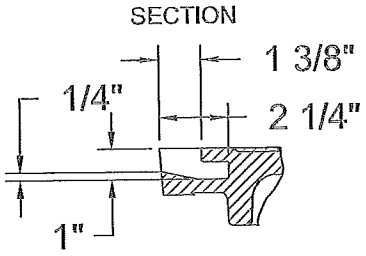


PICKHOLE DETAIL

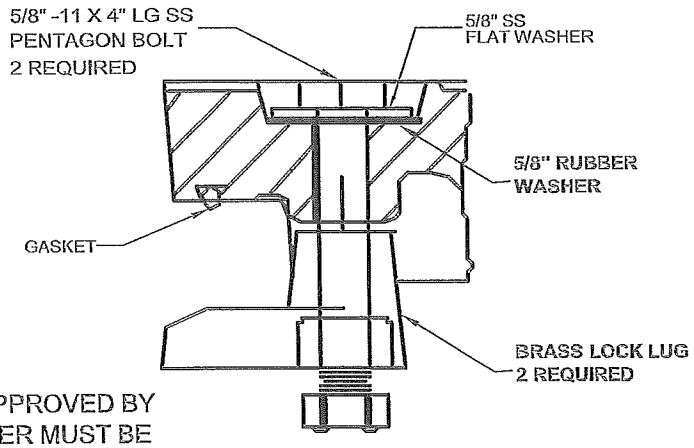


CAMLOCK ASSEMBLY
DETAIL

NOTES:

1. ALTERNATE COVERS TO THOSE SHOWN MUST BE APPROVED BY ENGINEER/TOWN. A SAMPLE OF THE FRAME AND COVER MUST BE DELIVERED TO TOWN AS PART OF THE REVIEW AND APPROVAL PROCESS.
2. COVERS MUST FIT ANY FRAME SHOWN IN DETAIL 105.
3. EJIW = EAST JORDAN IRON WORKS (1-800-626-4653)
4. COVERS TO BE ASTM A48 CLASS 35 GRAY IRON WITH A MINIMUM WEIGHT OF144 POUNDS.
5. NOMINAL DIMENSIONS SHOWN TYPICALLY MEAN PLUS OR MINUS 1/4" UNLESS OTHERWISE APPROVED BY ENGINEER.
6. THE NON-PENETRATING PICKHOLE IS THE STANDARD OPENING DEVICE.
7. ALL COVERS TO BE FURNISHED WITH GASKETS AS SHOWN. SIDE/WIPER GASKETS ARE NOT APPROVED.

TOWN OF THURMONT
FREDERICK COUNTY, MD

STANDARD MANHOLE COVERS

| No. | Date | By | Revision | Scale | Approved By | Date | DETAIL NO. |
|---|---|---|---|---|---|---|---|
| | | | | | | | 104 |

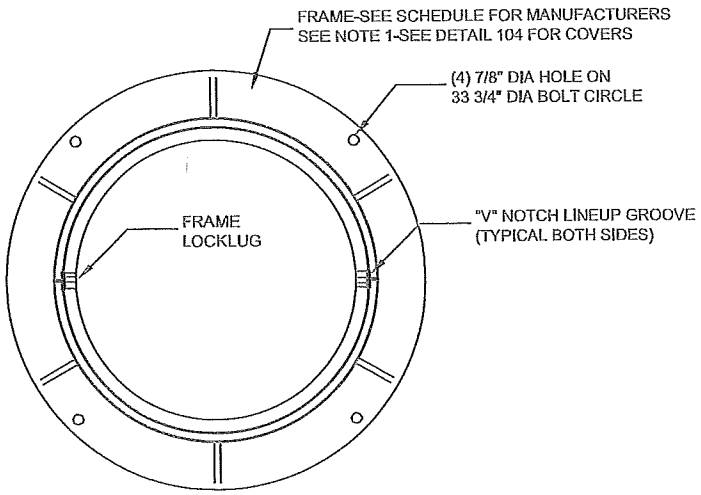


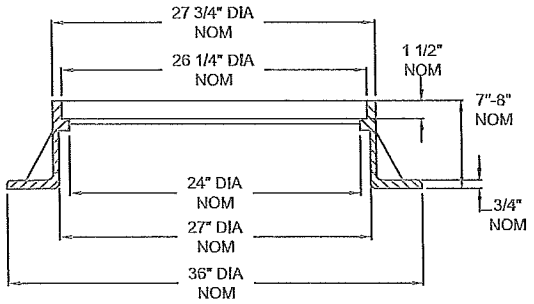


STANDARD HEIGHT

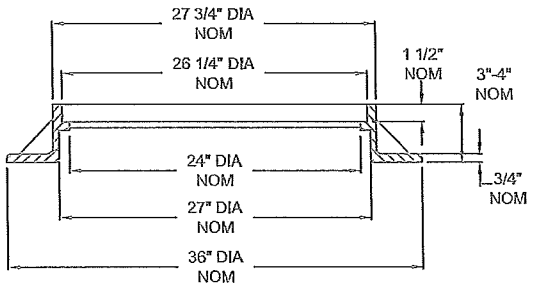


LOW PROFILE

## FRAME SCHEDULE

| | |
|---|---|
| STANDARD HEIGHT: | EJIW MODEL 104010, OR APPROVED EQUAL-SEE NOTE 1 MIN. WEIGHT 205 POUNDS |
| LOW PROFILE: | EJIW MODEL 104610, OR A PPROVED EQUAL-SEE NOTE 1 MIN. WEIGHT 115 POUNDS |
| SLAB-TYPE: | EJIW MODEL 280010 TOP FLANGE, OR APPROVED EQUAL-SEE NOTES 1 AND 4 |

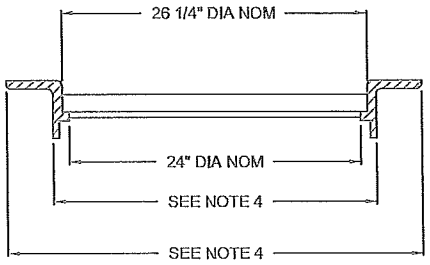


SLAB-TYPE

SEE NOTE 4

NOTES:

1. ALTERNATE FRAMES TO THOSE SHOWN MUST BE APPROVED BY TOWN/ENGINEER. A SAMPLE OF THE FRAME AND COVER MUST BE DELIVERED TO TOWN/ENGINEER AS PART OF THE REVIEW AND APPROVAL PROCESS.

   FRAMES MUST BE SUITABLE FOR USE WITH ANY COVER SPECIFIED IN DETAIL 104.

2. COVERS TO BE ASTM A48 CLASS 35 GRAY IRON WITH MINIMUM WEIGHTS SPECIFIED IN THE FRAME SCHEDULE.

3. NOMINAL DIMENSIONS SHOWN TYPICALLY MEAN PLUS OR MINUS 1/4" UNLESS OTHERWISE APPROVED BY TOWN/ENGINEER.

4. FRAME MANUFACTURER TO PROVIDE FINAL DIMENSIONS AS A SHOP DRAWING PRIOR TO FABRICATION.

TOWN OF THURMONT
FREDERICK COUNTY, MD

STANDARD MANHOLE FRAMES FOR COVERS

| No. | Date | By | Revision | Scale | Approved By | Date | DETAIL NO. |
|---|---|---|---|---|---|---|---|
| | | | | | | | 105 |

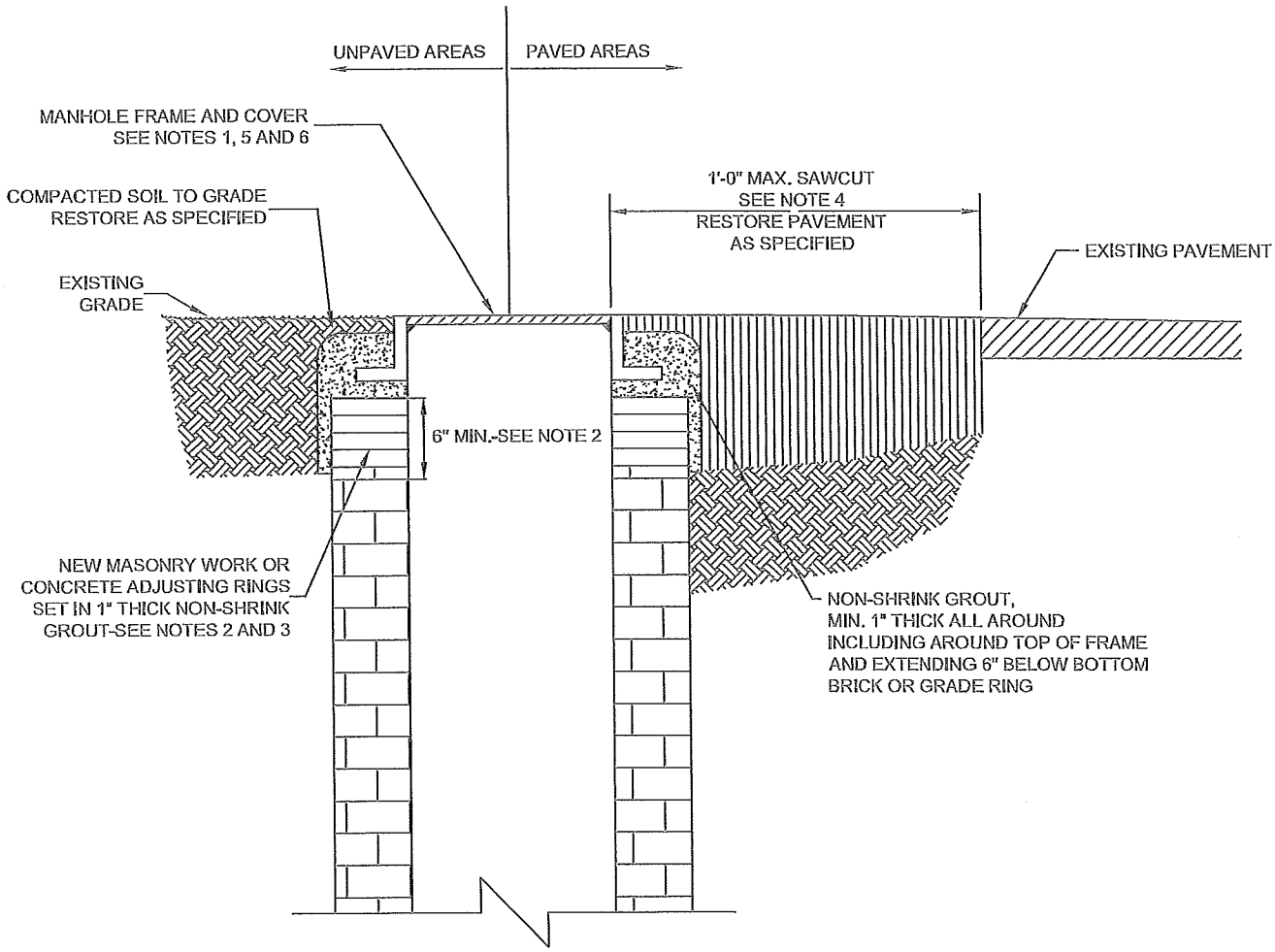


NOTES:

1. CONTRACTOR SHALL REFER TO THIS DETAIL WHEN RAISING MANHOLES AND WHEN RESETTING OR REPLACING EXISTING FRAMES AND COVERS. ALL REHABILITATION OF FRAMES AND COVERS SHALL BE COMPLETED PRIOR TO OTHER MANHOLE REHABILITATION WORK.

2. CONTRACTOR TO REMOVE AT LEAST 6" OF EXISTING BRICK AND/OR WALL MATERIAL PRIOR TO INSTALLING NEW MASONRY OR CONCRETE ADJUSTING RINGS TO PROVIDE A NEW SOLID SURFACE FOR SEATING THE FRAME AND TO PROVIDE A LEAK-TIGHT SEAL UNLESS OTHERWISE APPROVED BY TOWN/ENGINEER. ONLY ONE COURSE OF BRICK (MAX) SHALL BE USED.

3. REMOVE ALL LOOSE BRICKS AND MORTAR AND PROVIDE A SMOOTH LEVEL SURFACE PRIOR TO INSTALLING MASONRY OR CONCRETE ADJUSTING RINGS. BRUSH SURFACE WITH STIFF WIRE BRUSH PRIOR TO PLACING NON-SHRINK GROUT.

4. IN PAVED AREAS, PAVEMENT SHALL BE SAW-CUT NEATLY IN A SQUARE AROUND EXISTING MANHOLES. PAVEMENT SHALL BE IN ACCORDANCE WITH DETAIL AND MEET ALL MD SHA REQUIREMENTS. PROVIDE TACK COAT ALL AROUND AT SAWCUT/JOINT WITH EXISTING PAVEMENT.

5. FINAL ELEVATION OF MANHOLE COVER TO BE EQUAL TO THE EXISTING COVER ELEVATION UNLESS NOTED OTHERWISE. SET FRAME AND COVER TO 1/2" BELOW GRADE.

6. NEW FRAMES AND COVERS WHERE REQUIRED SHALL BE AS SPECIFIED AND SHOWN IN STANDARD DETAIL NO. 104 AND 105.

TOWN OF THURMONT
FREDERICK COUNTY, MD

REHABILITATION AND HEIGHT ADJUSTMENT OF EXISTING MANHOLE FRAME AND COVER

| No. | Date | By | Revision | Scale | Approved By | Date | DETAIL NO. |
|---|---|---|---|---|---|---|---|
| | | | | | | | 106 |

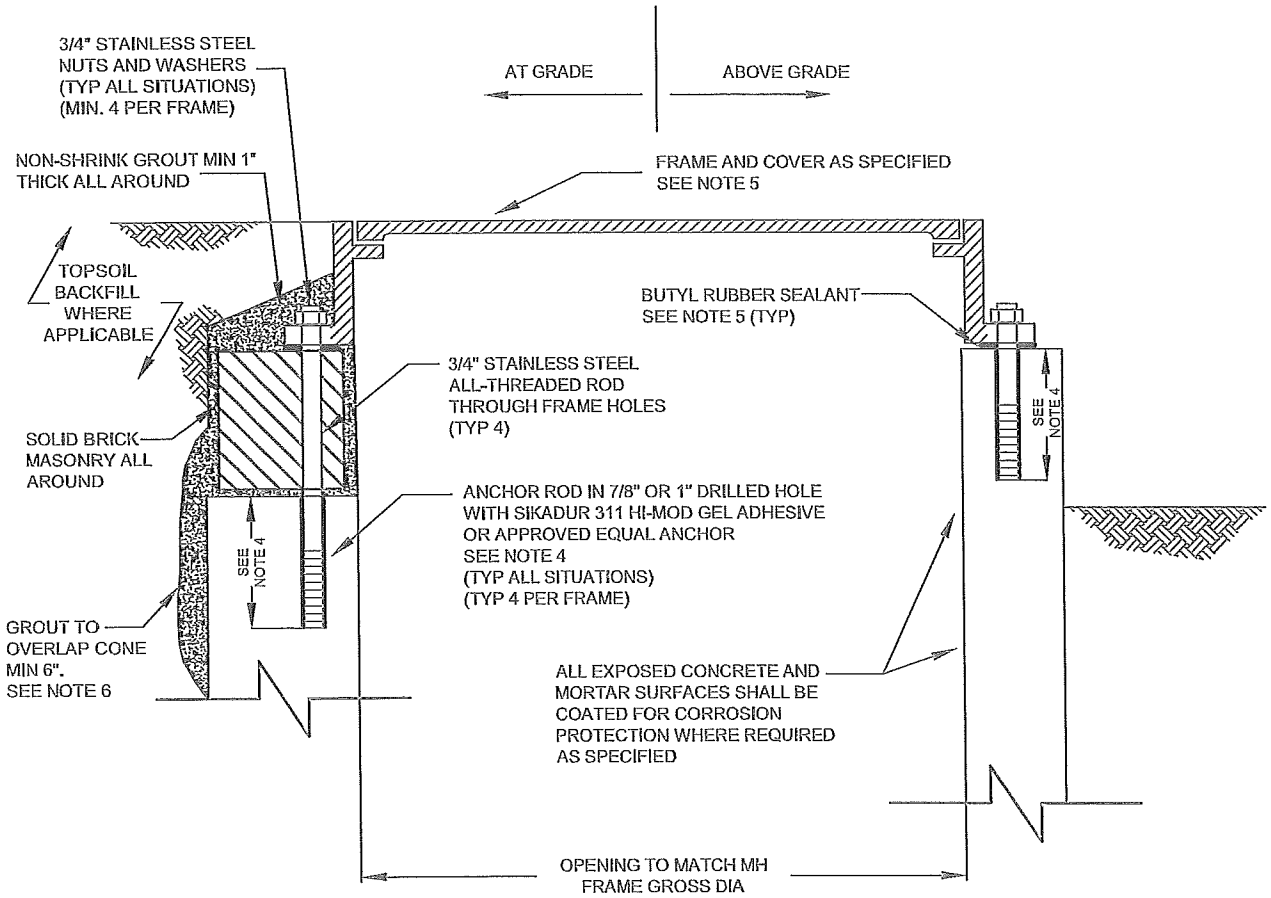


NOTES:

1. ALL FRAMES INSTALLED SHALL BE ANCHORED TO MANHOLE CONE SECTIONS PER THIS DETAIL. FOR FLAT TOP SECTIONS, THIS DETAIL ONLY APPLIES WHEN THE COVER IS TERMINATING FLUSH WITH THE GRADE (WHEN A NON-SLAB TYPE FRAME IS USED.

2. THIS DETAIL DEPICTS ANCHORING FRAMES AND COVERS TO CONE SECTION. THE DETAIL ALSO APPLIES TO FLAT TOP SECTIONS PER NOTE 1.

3. MANHOLE SECTIONS TO BE RESTRAINED WITH MANHOLE PRESSURE RESTRAINT SYSTEM SPECIFIED IN DETAIL NO. 102 WHENEVER ANCHORING WATERTIGHT FRAMES AND COVERS PER THIS DETAIL.

4. FOR FLAT-TOP SECTIONS, ANCHOR ROD MIN 3/4 OF THE SLAB THICKNESS. FOR CONE SECTIONS, ANCHOR ROD MIN 4" INTO CONE. SUBMIT PROPOSED ANCHORING TO ENGINEER FOR REVIEW AND APPROVAL

5. INSTALL BUTYL RUBBER (MASTIC) SEALANT UNDER FRAME-2 COMPLETE CIRCLES.

6. PARGE OVER TRANSITION BETWEEN TOP OF MASONRY AND FRAME.

TOWN OF THURMONT
FREDERICK COUNTY, MD

INSTALLATION OF MANHOLE FRAMES AND COVERS

| No. | Date | By | Revision | Scale | Approved By | Date | DETAIL NO. |
|---|---|---|---|---|---|---|---|
| | | | | | | | 107 |

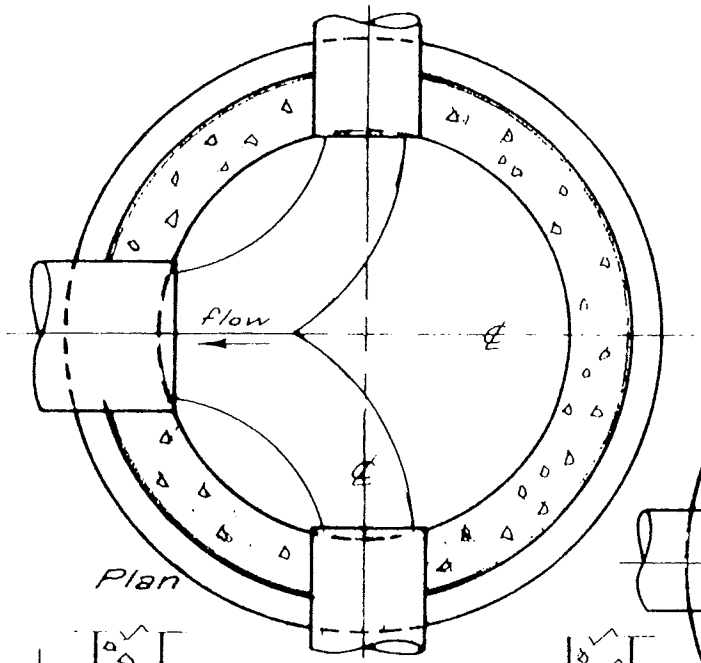


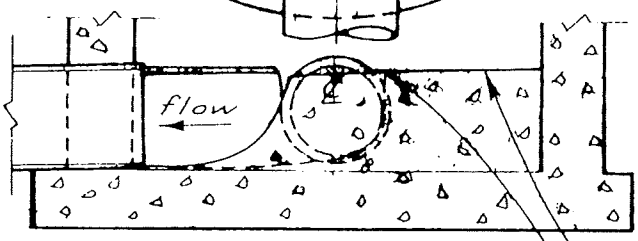


Section on ℄

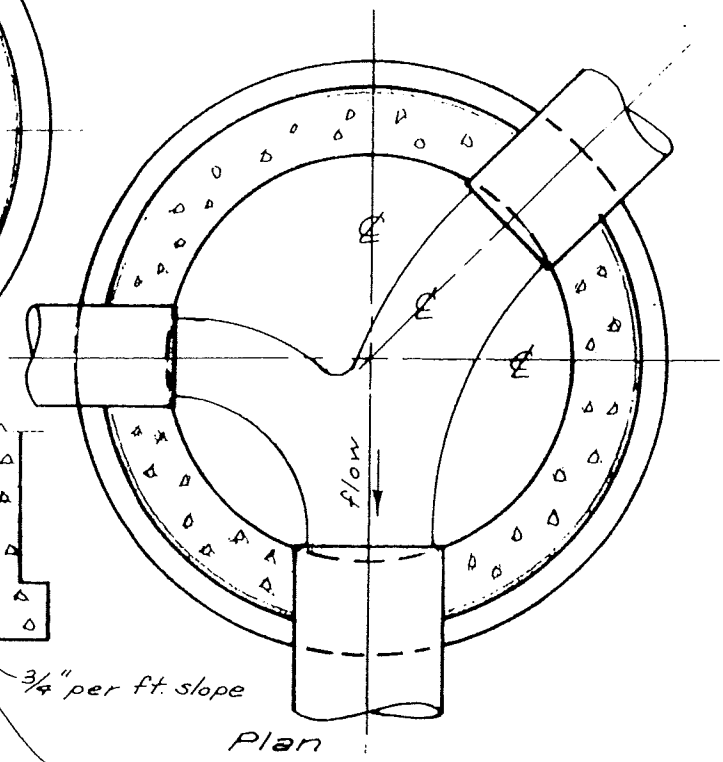


3/4" per ft. slope

Bench to crown of pipe but not to overhang the channel.

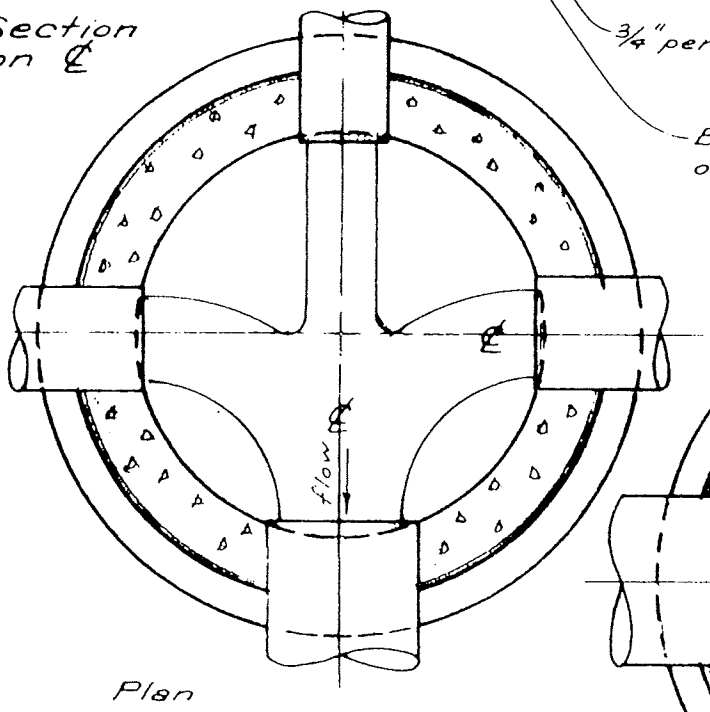


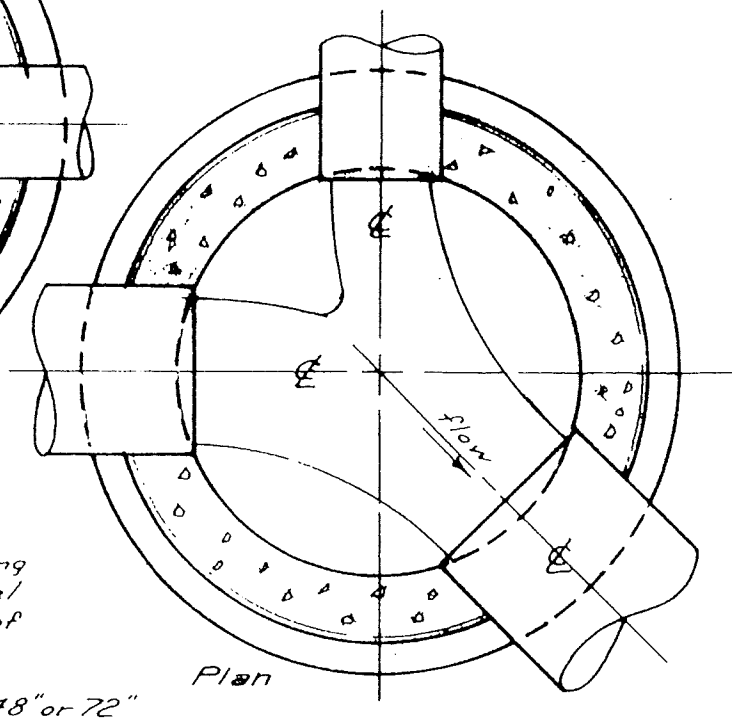


Channels shall be constructed using a template to ensure that channel cross-section will allow insertion of testing, cleaning and inspection equipment.

Inside diameter of MH's is either 48" or 72"

Conc channels shall be Md S.H.A mix No. 1 with type II cement and GP aggregate.

K.C.H.

| Commissioners, of Thurmont | Revisions: Date / Note | Channel Layout for Sewer Manhole Bases | Detail No. 108 |
|---|---|---|---|
| | | | Date: 6-2-82 |

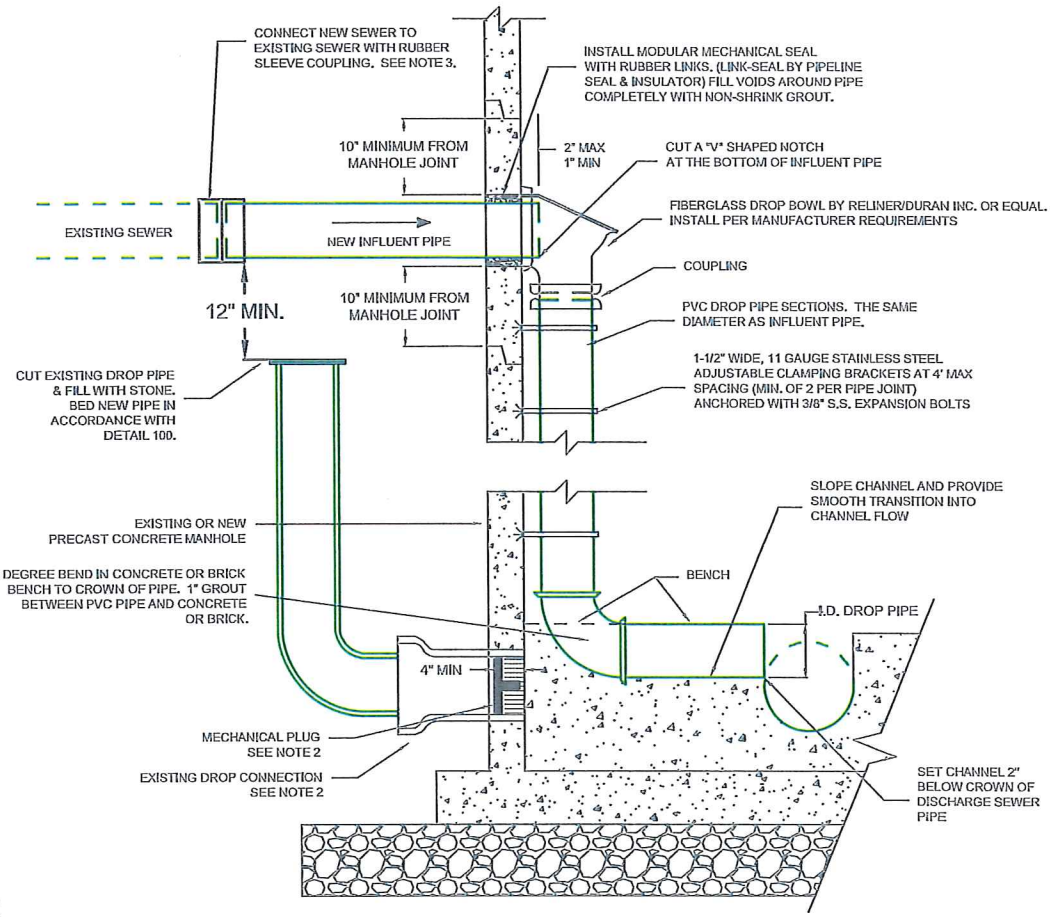


NOTES:

1. THE DROP BOWL SHALL NOT EXTEND INTO THE AREA THAT IS DEFINED BY THE PROJECTION OF THE MANHOLE ENTRANCE VERTICALLY DOWN TO THE MANHOLE BOTTOM. IF NECESSARY, MANHOLE FRAME, COVER, CONE SECTION, AND STEPS SHALL BE REMOVED AND PLACED TO ALLOW FOR UNOBSTRUCTED ENTRY AND EXIT.

2. WHEN INSIDE DROP CONNECTION REPLACES EXISTING OUTSIDE DROP, PROVIDE MECHANICAL PLUG AND FILL CAVITY SPACE WITH NON-SHRINK GROUT FLUSH WITH INSIDE FACE OF MANHOLE.

3. CONNECT SEWER TO EXISTING SEWER WITH RUBBER SLEEVE COUPLING WITH STAINLESS STEEL COMPRESSION BANDS AND SHEAR RINGS AS MANUFACTURED BY MISSION PRODUCTS OR EQUAL. COUPLING TO BE A MINIMUM OF 6" WIDE.

4. INSTALL NEW INFLUENT PIPE TO MATCH GRADE OF EXISTING SEWER AND PROVIDE POSITIVE DRAINAGE INTO MANHOLE.

5. USE THIS DETAIL ONLY WHEN THE DIFFERENCE BETWEEN THE TOP AND BOTTOM INVERT IS GREATER THAN 2.5 FEET.

TOWN OF THURMONT
FREDERICK COUNTY, MD

INSIDE DROP CONNECTION FOR PRECAST CONCRETE MANHOLES-DETAIL VIEW

| No. | Date | By | Revision | Scale | Approved By | Date | DETAIL NO. |
|---|---|---|---|---|---|---|---|
| | | | | | | | 109 |

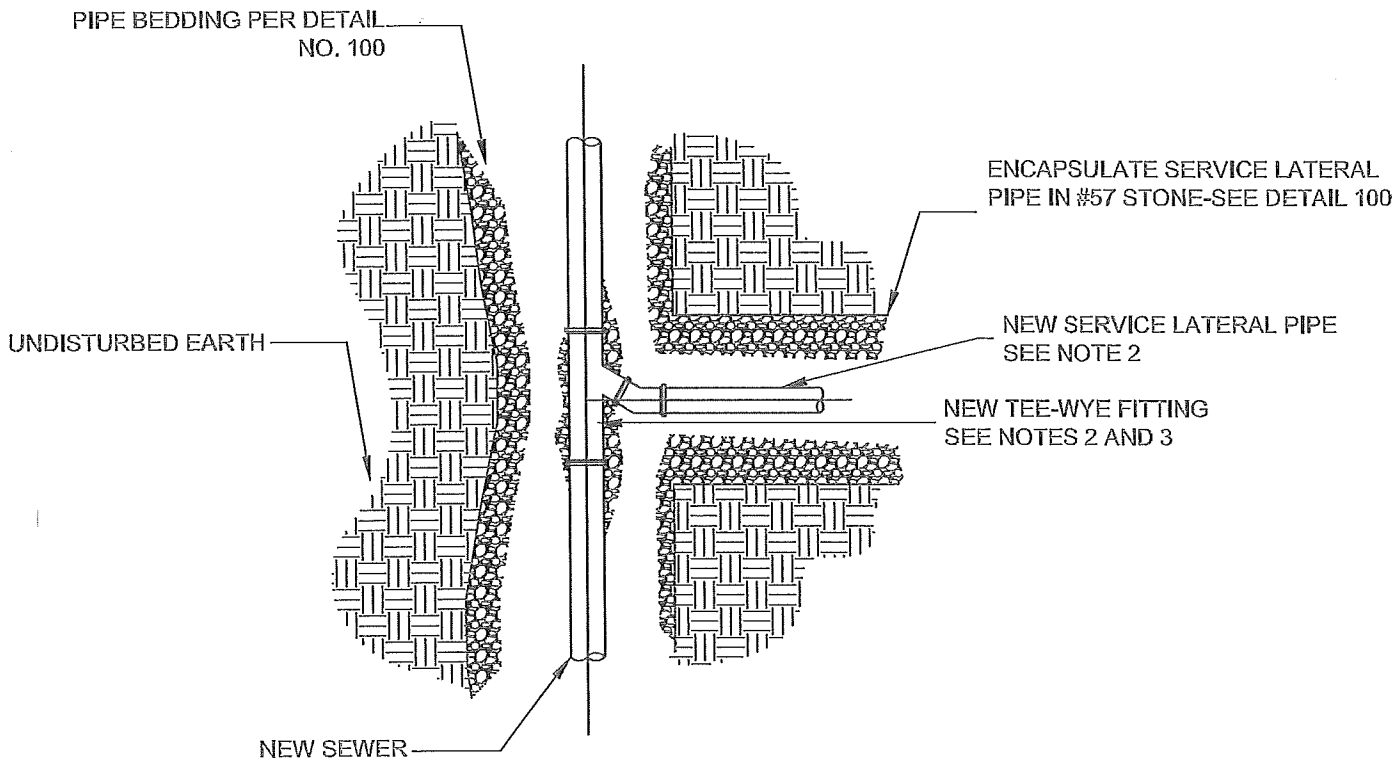


NOTES:

1. REFER TO THIS DETAIL WHEN CONNECTING NEW SERVICE LATERALS TO NEW SEWERS WITH A TEE-WYE FITTING. TEE-WYE CONNECTIONS ARE REQUIRE FOR CONNECTING NEW LATERALS TO NEW SEWERS. TEE-WYE FITTINGS SHALL BE INSTALLED AS THE NEW SEWER IS LAID TO SERVE ALL PROPERTIES. INSTALLING THE NEW SEWER AND THEN LATER TAPPING THE SEWER WITH A SADDLE CONNECTION SHALL NOT BE ALLOWED

2. INSTALL FITTINGS AND ADAPTERS AS NECESSARY TO CONNECT NEW TEE-WYE AND SERVICE LATERAL. 90° BENDS ARE NOT ALLOWED. NEW MAIN SEWER, TEE-WYE AND SERVICE LATERAL SHALL BE PVC UNLESS OTHERWISE APPROVED OR REQUIRED.

3. ROTATE NEW TEE-WYE 45 DEGREES FROM HORIZONTAL TO THE LEFT OR RIGHT AS APPROPRIATE AND INSTALL FITTINGS/BENDS AS NECESSARY TO ROUTE LATERAL ALONG DESIRED ELEVATION. SERVICES SHALL NOT ENTER THE TOP OF THE SEWER.

4. REFER TO DETAIL NO 112 FOR PROFILE VIEW OF THIS WORK.

TOWN OF THURMONT
FREDERICK COUNTY, MD

SERVICE LATERAL TEE-WYE CONNECTION TO NEW SEWER

| | | | | | | | DETAIL NO. |
|---|---|---|---|---|---|---|---|
| No. | Date | By | Revision | Scale | Approved By | Date | 110 |

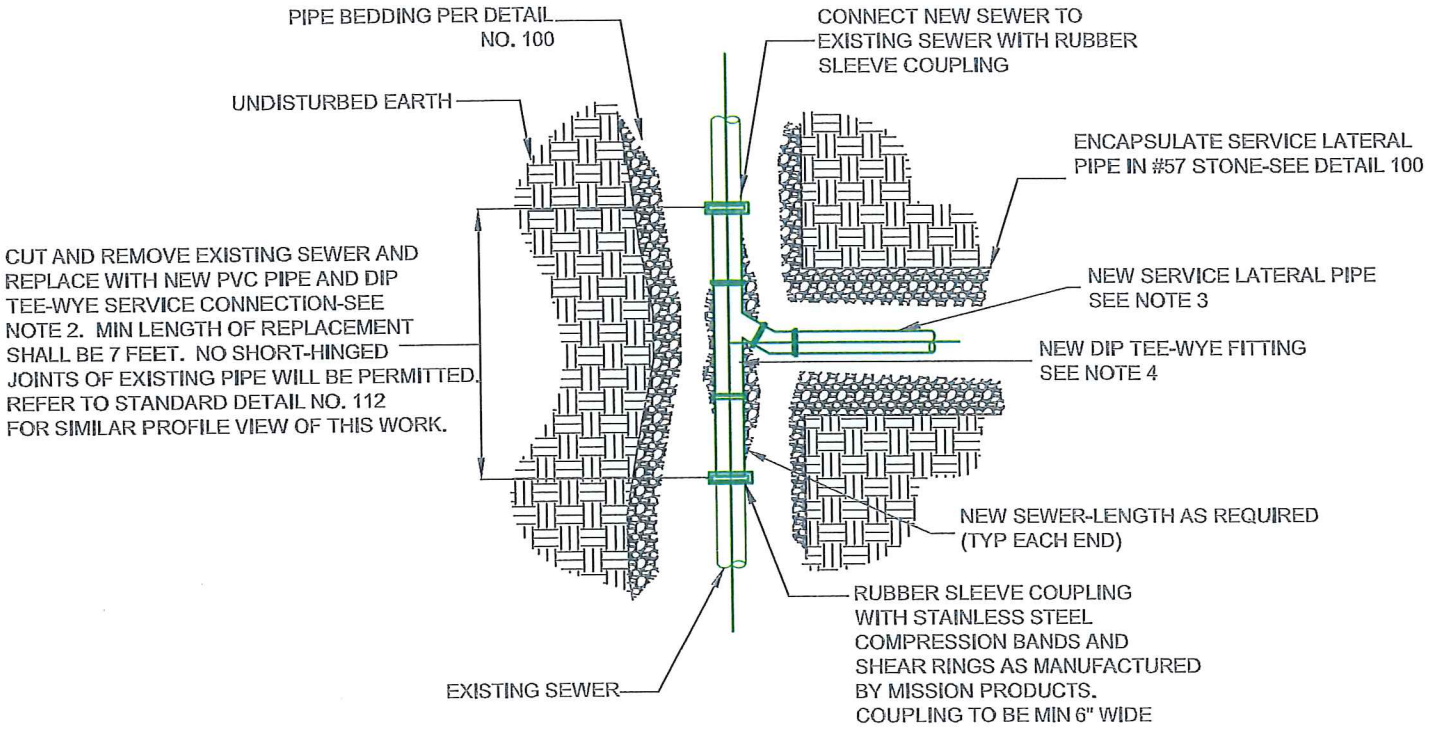


NOTES:

1. REFER TO THIS DETAIL WHEN CONNECTING NEW SERVICE LATERALS TO EXISTING SEWERS. SADDLE CONNECTIONS WILL NOT BE ALLOWED UNLESS DIRECTED BY THE ENGINEER.

2. INSTALL THE NEW SEWER AT A CONSTANT SLOPE BETWEEN THE TWO EXISTING PIPE ENDS.

3. INSTALL FITTINGS, ADAPTERS AND RUBBER SLEEVE COUPLINGS AS NECESSARY TO CONNECT NEW PIPE AS SHOWN. NEW TEE-WYE SHALL BE DIP. NEW SEWER MAIN SHALL BE PVC. NEW LATERALS AND TEE-WYE BRANCHES SHALL BE THE SAME SIZE AS THE EXISTING LATERAL. CONNECT MJ ON DIP TEE WYE TO NEW PVC PIPE WITH MJ x SDR35 TRANSITION GASKETS.

4. ROTATE NEW TEE-WYE 45 DEGREES FROM HORIZONTAL TO THE LEFT OR RIGHT AS APPROPRIATE AND INSTALL FITTINGS/BENDS AS NECESSARY TO ROUTE LATERAL ALONG DESIRED ELEVATION. 90° BENDS ARE NOT ALLOWED. SERVICES SHALL NOT ENTER THE TOP OF THE SEWER PIPE.

5. MAIN SEWER SHALL BE INSPECTED BY CONTRACTOR VIA CLOSED CIRCUIT TELEVISION (CCTV) AFTER INSTALLATION OF LATERAL TO VERIFY PROPER ALIGNMENT OF NEW SEWER AND PROPER CONNECTION TO EXISTING SEWER. ANY OFFSET JOINTS OR MISALIGNMENT SHALL BE CORRECTED PRIOR TO ACCEPTANCE BY TOWN. THE CCTV INSPECTION TAPE AND LOG SHALL BE SUBMITTED TO TOWN FOR REVIEW AND APPROVAL AND SHALL CLEARLY SHOW EACH PIPE CONNECTION AND THE SERVICE LATERAL. APPROVAL MUST BE RECEIVED PRIOR TO THE INSTALLATION OF ANY CIPP ON A PARTICULAR SEWER LINE.

6. REFER TO DETAIL NO. 112 FOR PROFILE VIEW OF THIS WORK.

TOWN OF THURMONT
FREDERICK COUNTY, MD

SERVICE LATERAL TEE-WYE CONNECTION TO EXISTING SEWER

| No. | Date | By | Revision | Scale | Approved By | Date | DETAIL NO. |
|---|---|---|---|---|---|---|---|
| | | | | | | | 111 |

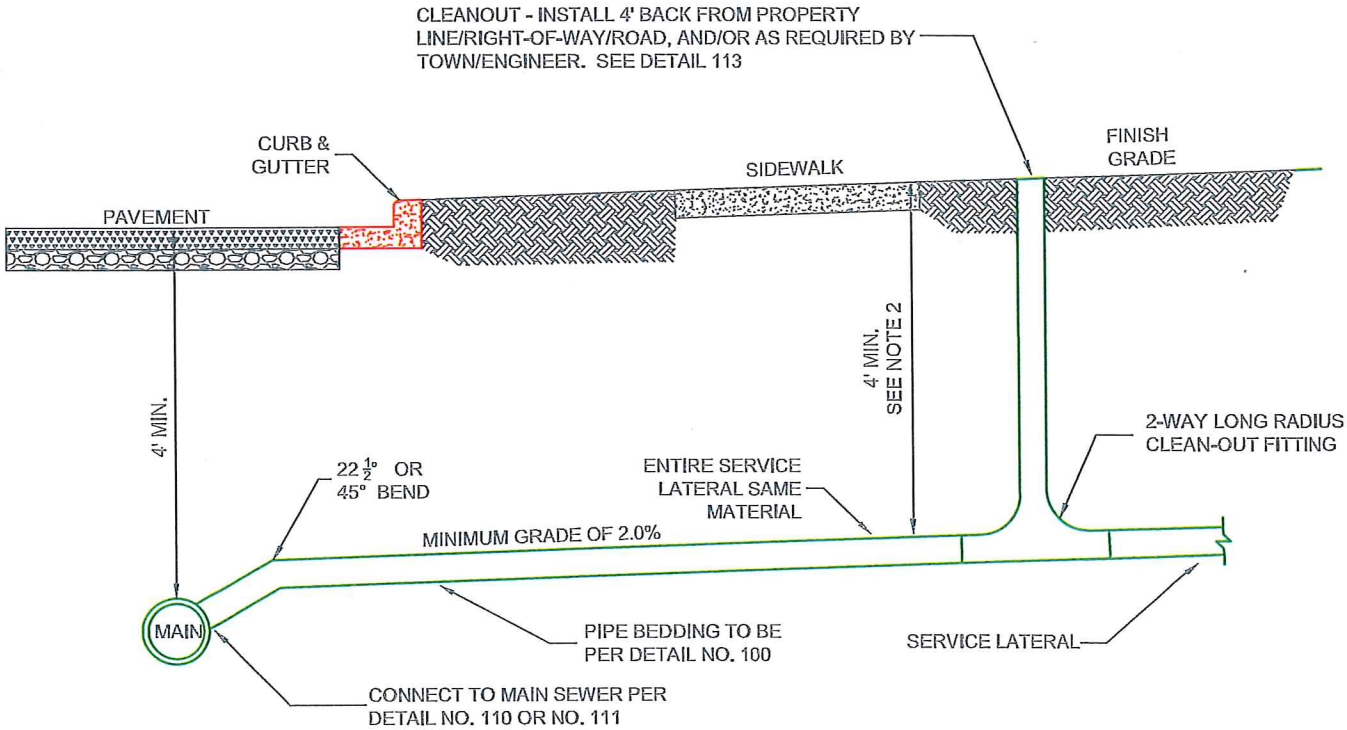


NOTES:

1. THIS DETAIL ILLUSTRATES A TYPICAL SERVICE LATERAL INSTALLATION FROM THE MAIN SEWER (EITHER NEW OR EXISTING)TO THE PROPERTY LINE OR EDGE OF THE ROAD/SEWER RIGHT-OF-WAY.

2. WHEN SERVICE LATERALS ARE INSTALLED TO THE HOUSE OR BUSINESS, THE NEW LATERAL SHALL REMAIN AT A MINIMUM SLOPE OF 2% AND SHALL MAINTAIN AT LEAST 4 FEET OF COVER WITHIN THE ROAD R/W. THERE IS NO SPECIFIED MINIMUM DEPTH OF COVER FOR LATERALS ONCE THEY ENTER PRIVATE PROPERTY BUT A MINIMUM OF 3' OF COVER IS RECOMMENDED. PIPE TYPES MAY NOT CHANGE FROM THE MAIN SEWER TO THE HOUSE/BUILDING UNLESS TOWN/ENGINEER APPROVES OTHERWISE.

3. IF 4 FEET OF COVER CAN NOT BE PROVIDED WITHIN THE ROAD R/W, SPECIAL INSTALLATION MAY BE REQUIRED BY TOWN/ENGINEER OR MDSHA.

4. CLEANOUTS SHALL BE INSTALLED AT ALL BENDS IN THE LATERAL, AT LEAST EVERY 75 FEET AND/OR AS REQUIRED BY TOWN/ENGINEER. CLEANOUTS SHALL BE IN ACCORDANCE WITH DETAIL 113.

5. REFER TO OTHER REFERENCED DETAILS FOR ADDITIONAL REQUIREMENTS.

| | | | | | | | |
|---|---|---|---|---|---|---|---|
| | | | | TOWN OF THURMONT<br>FREDERICK COUNTY, MD | | | |
| | | | | STANDARD SERVICE LATERAL INSTALLATION | | | |
| No. | Date | By | Revision | Scale | Approved By | Date | DETAIL NO.<br>112 |

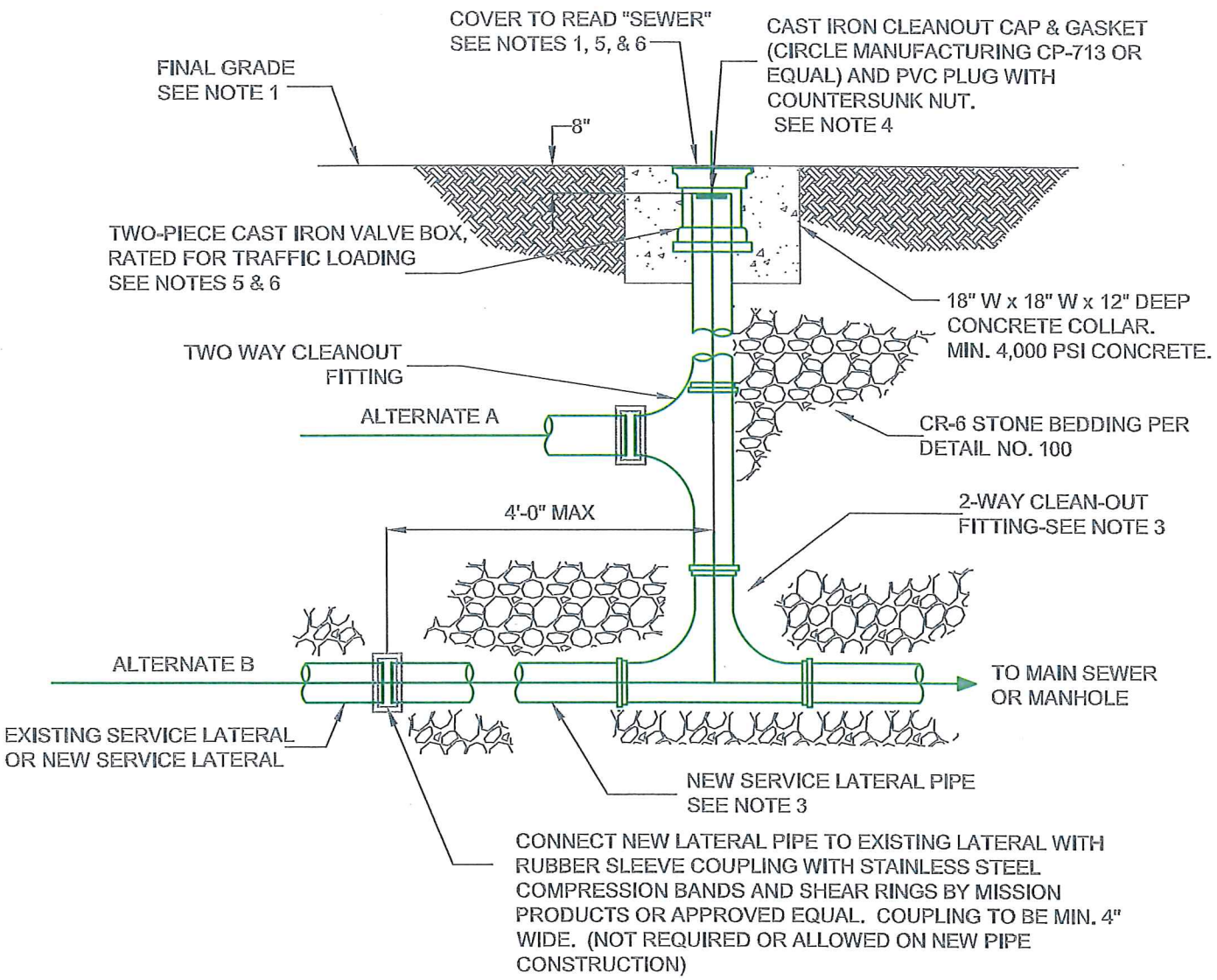


NOTES:

1. CLEANOUT COVER TO BE FLUSH WITH THE FINAL GRADE.
2. LOCATION OF CLEANOUT TO BE FIELD APPROVED BY TOWN/ENGINEER. CLEANOUTS SHALL BE INSTALLED AT ALL BENDS IN THE LATERAL, AT LEAST EVERY 75 FEET AND/OR AS REQUIRED BY TOWN/ENGINEER.
3. LATERAL PIPE AND FITTINGS SHALL BE THE SAME PIPE MATERIAL UNLESS APPROVED OTHERWISE BY TOWN/ENGINEER.
4. ALTERNATE CLEANOUT CAPS MUST BE APPROVED BY TOWN/ENGINEER.
5. VALVE BOXES SHALL BE GRAY IRON CONFORMING TO ASTM A48 CLASS 35 AND SHALL BE FULLY BITUMINOUS SEAL COATED, MIN. LENGTH OF TOP SECTION TO BE 16 INCHES.
6. INSTALL AN 18" X 18" CONCRETE COLLAR (MIN. 2500 PSI CONCRETE, 6" THICK) AROUND ALL CAST IRON VALVE BOXES LOCATED IN ANY ASPHALT OR CONCRETE PAVED AREA.
7. FOR GRASSED AREAS, 4,000 PSI CONCRETE COLLAR AND THE 2-PIECE CAST IRON VALVE BOX ARE NOT REQUIRED.
8. FOR EITHER ALTERNATE A OR B LOCATIONS FOR HOUSE SEWER CONNECTION, THE MINIMUM DEPTH BELOW FINISHED GRADE SHALL BE 3'.

TOWN OF THURMONT
FREDERICK COUNTY, MD

TYPICAL CLEANOUT DETAILS

| No. | Date | By | Revision | Scale | Approved By | Date | DETAIL NO. |
|---|---|---|---|---|---|---|---|
| | | | | | | | 113 |

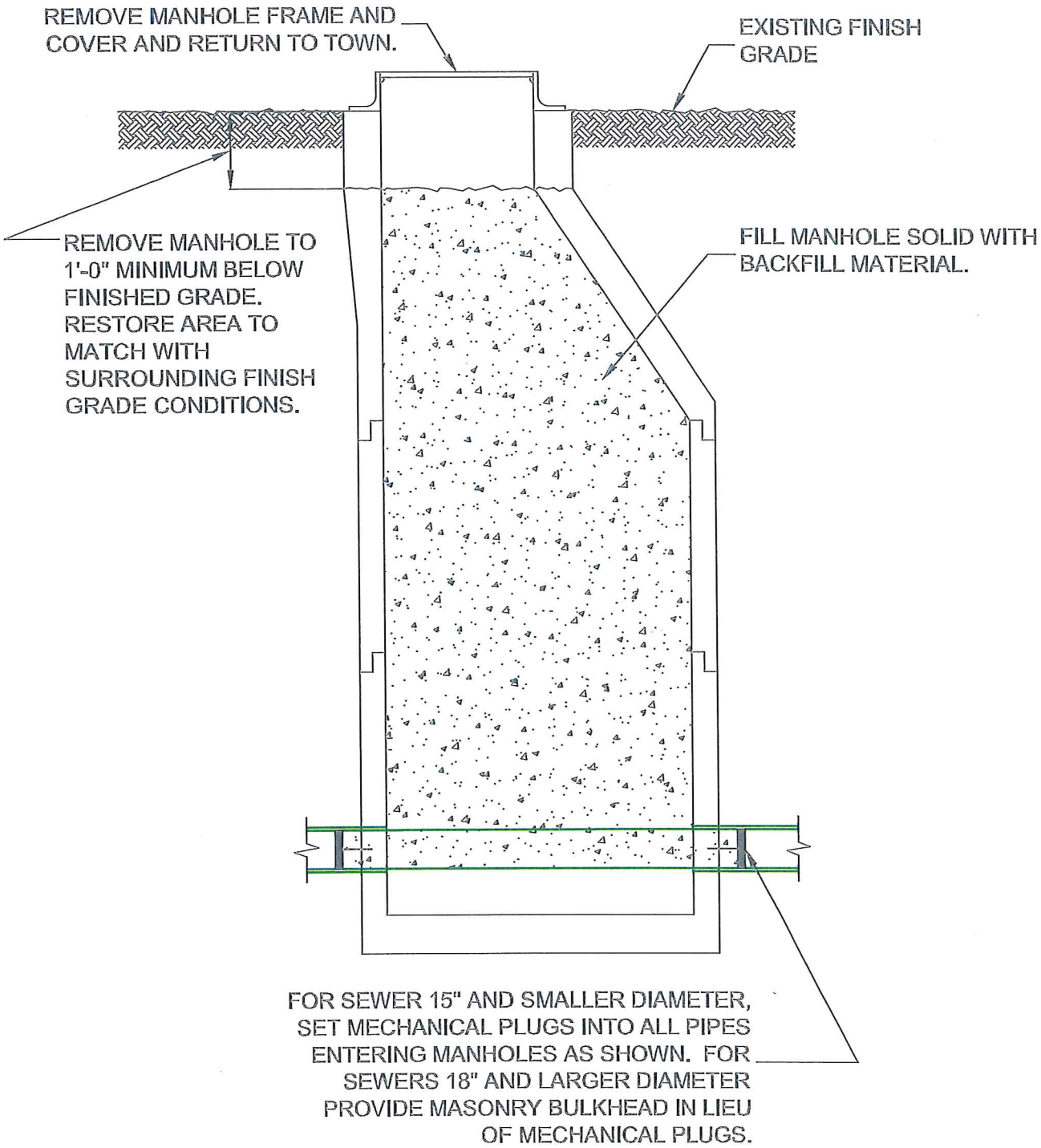


TOWN OF THURMONT
FREDERICK COUNTY, MD

COMPLETE MANHOLE ABANDONMENT

| No. | Date | By | Revision | Scale | Approved By | Date | DETAIL NO. |
|---|---|---|---|---|---|---|---|
| | | | | | | | 114 |

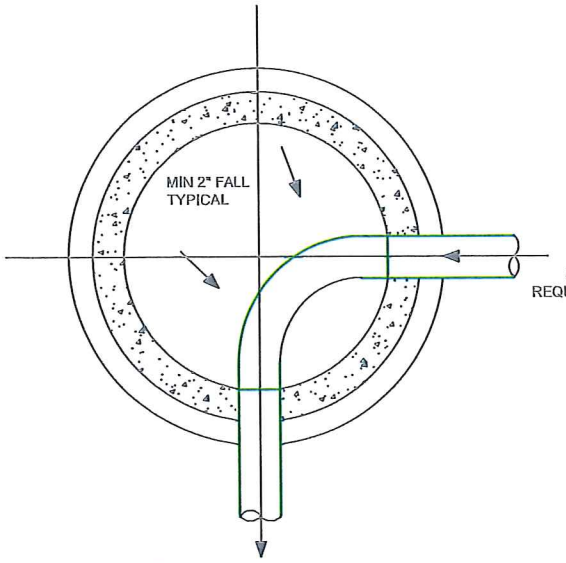


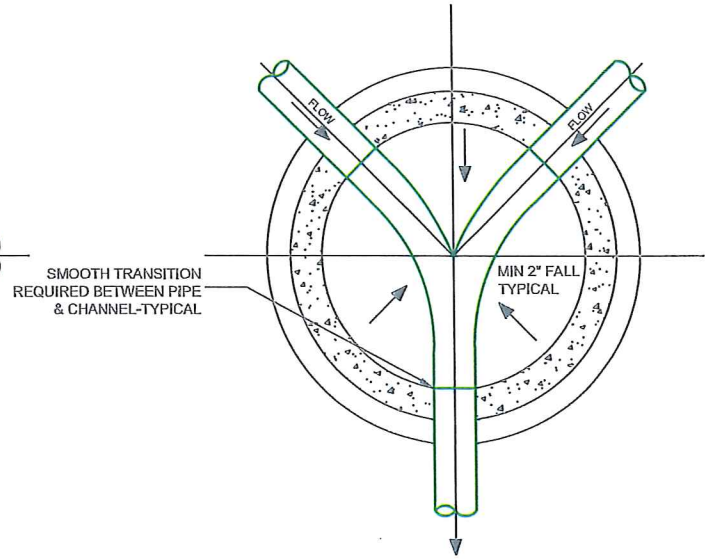


## CHANNEL LINING NOTES:

1. BENCHING & INVERT CHANNELS SHALL BE PRECAST BY THE MANHOLE MANUFACTURER UNLESS DIRECTED OTHERWISE BY ENGINEER. BENCHING AND CHANNELS SHALL BE CONSTRUCTED OF MINIMUM 4,000 PSI CONCRETE WITH FIBER REINFORCING.
2. WIDTH OF CHANNEL SHALL MATCH INSIDE DIAMETER OF INCOMING AND OUTGOING PIPES. BLEND CHANNEL LINING FOR SMOOTH CONTOUR BETWEEN PIPES.
3. ALL INVERT ELEVATIONS SHALL BE AS SHOWN ON THE DRAWINGS.
4. AT LEAST 2 INCHES OF FALL SHALL BE PROVIDED ON THE BENCHING FROM THE MANHOLE WALLS TO THE TOP EDGE OF THE INVERT CHANNEL.

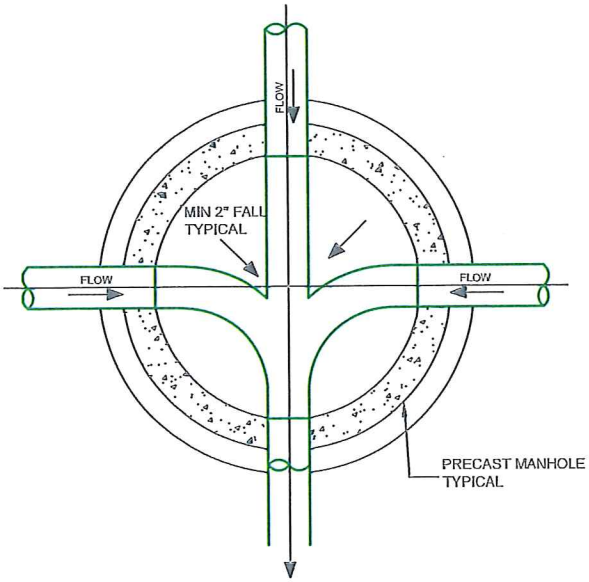


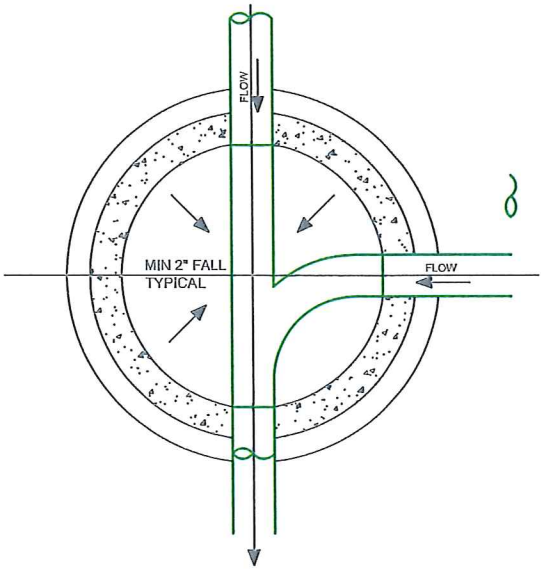


TOWN OF THURMONT
FREDERICK COUNTY, MD

PLAN OF TYPICAL CHANNELIZATION OF SEWER MANHOLES

| No. | Date | By | Revision | Scale | Approved By | Date | DETAIL NO. |
|---|---|---|---|---|---|---|---|
| | | | | | | | 115 |

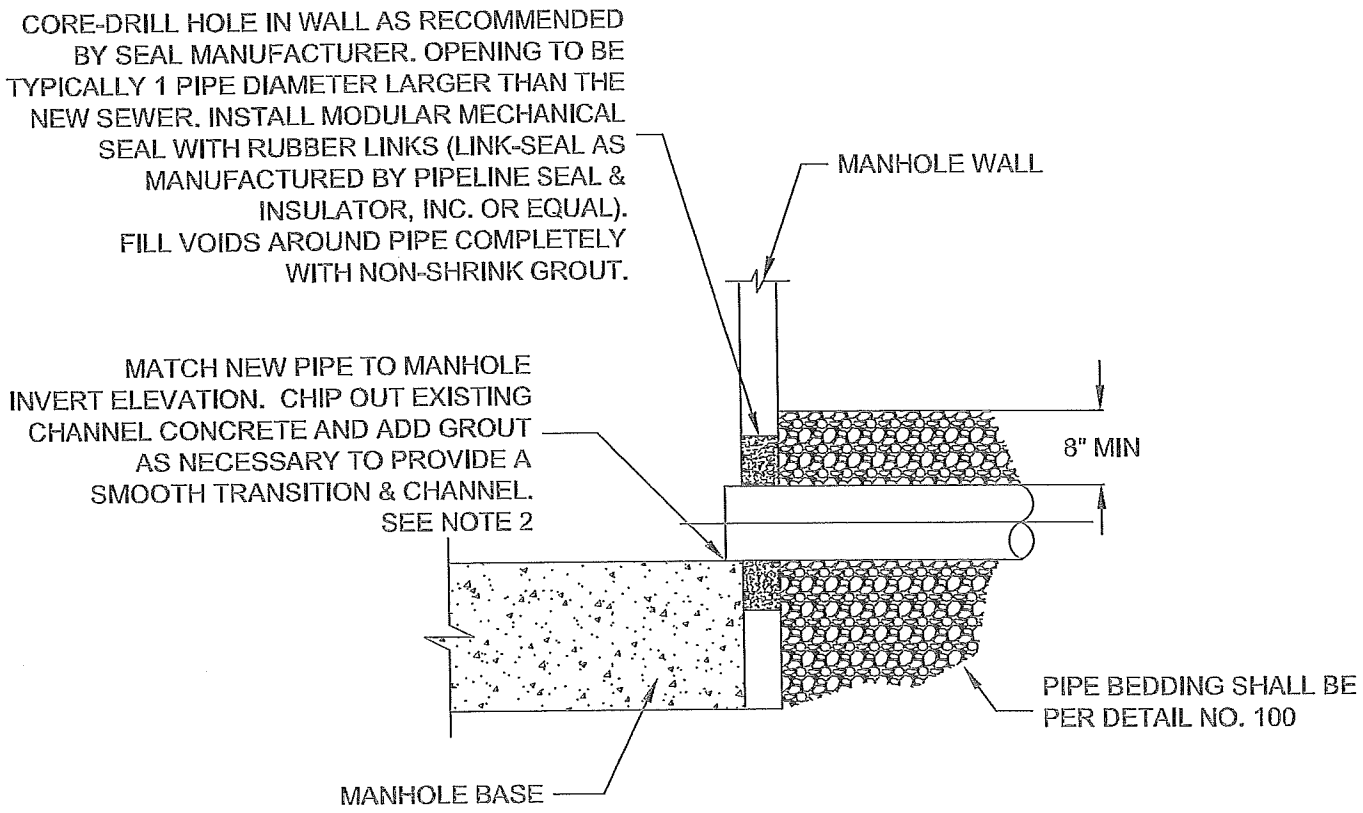


NOTES:

1. REFER TO THIS DETAIL WHEN CONNECTING NEW SEWER PIPES (INCLUDING SERVICE LATERALS) TO EXISTING MANHOLES OR NEW MANHOLES WHERE FLEXIBLE COUPLINGS ARE NOT USED.

2. THIS DETAIL DEPICTS THE NEW SEWER ENTERING AT THE EXISTING INVERT ELEVATION. THIS WILL NOT BE THE CASE FOR ALL MAIN SEWERS. PROVIDE A SMOOTH TRANSITION AND INVERT CHANNEL FOR ANY INCOMING ELEVATION PER DETAIL NO. 115.

   PROVIDE AN INVERT CHANNEL ON THE BENCH PER DETAIL NO. 115.

TOWN OF THURMONT
FREDERICK COUNTY, MD

NEW PIPE CONNECTION AT MANHOLE

| | | | | | | | DETAIL NO. |
|---|---|---|---|---|---|---|---|
| No. | Date | By | Revision | Scale | Approved By | Date | 116 |

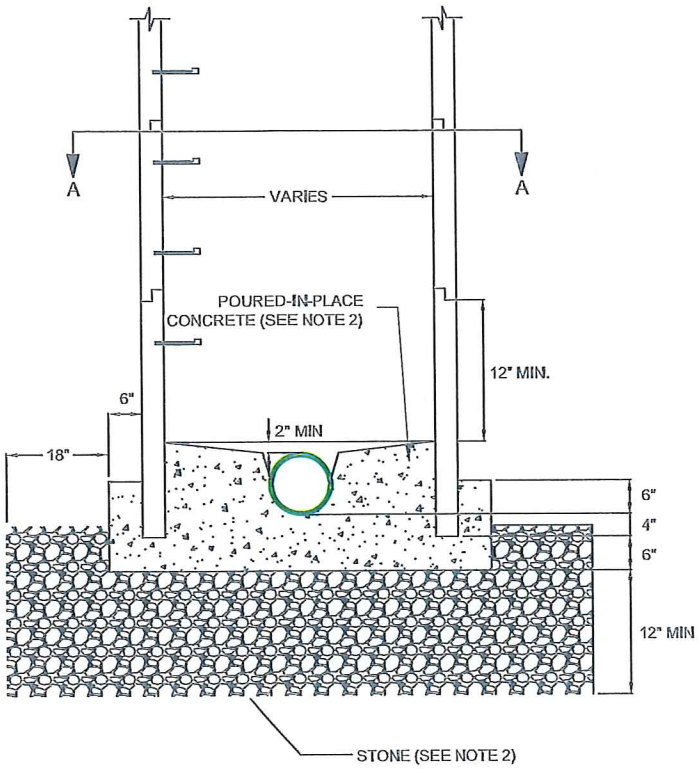


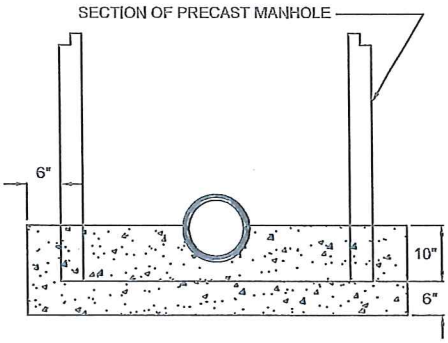


## SECTION B-B

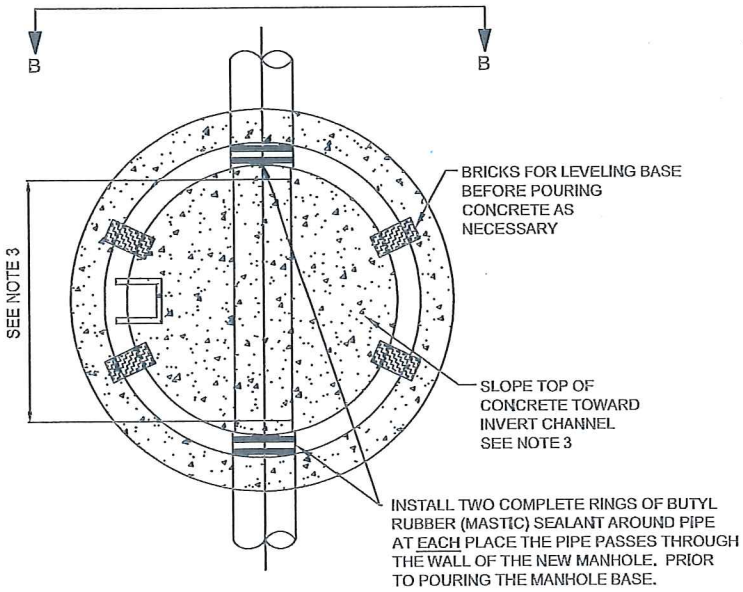


## SECTION A-A

NOTES:

1. REFER TO DETAIL NO. 101 FOR MANHOLE REQUIREMENTS.
2. DIG OUT DITCH AND PREPARE STONE BEDDING. POUR CONCRETE FOOTING AND SET DOGHOUSE MANHOLE IN WET CONCRETE. BUILD BENCH AND FULL INVERT CHANNEL. CONCRETE SHALL BE 4,000 PSI FIBER-REINFORCED CONCRETE. REFER TO DETAIL NO. 115.
3. NEATLY SAW-CUT THE EXISTING SEWER 2" INSIDE THE NEW MANHOLE WALLS AND 1/2 WAY DOWN THE EXISTING PIPE. THEN FORM CONCRETE BENCH AND FULL INVERT CHANNEL. SEE DETAIL NO. 115.
4. AFTER BENCH AND INVERT ARE FORMED BUT BEFORE MANHOLE IS BACKFILLED, CONTRACTOR SHALL USE NON-SHRINK GROUT TO COMPLETELY FILL IN AND SMOOTH WALLS INSIDE AND OUTSIDE OF MANHOLE AROUND ALL PIPE ENTRIES/EXITS.

TOWN OF THURMONT
FREDERICK COUNTY, MD

PRECAST DOGHOUSE MANHOLE
INSTALLED OVER EXISTING SEWER

| No. | Date | By | Revision | Scale | Approved By | Date | DETAIL NO. |
|---|---|---|---|---|---|---|---|
| | | | | | | | 117 |

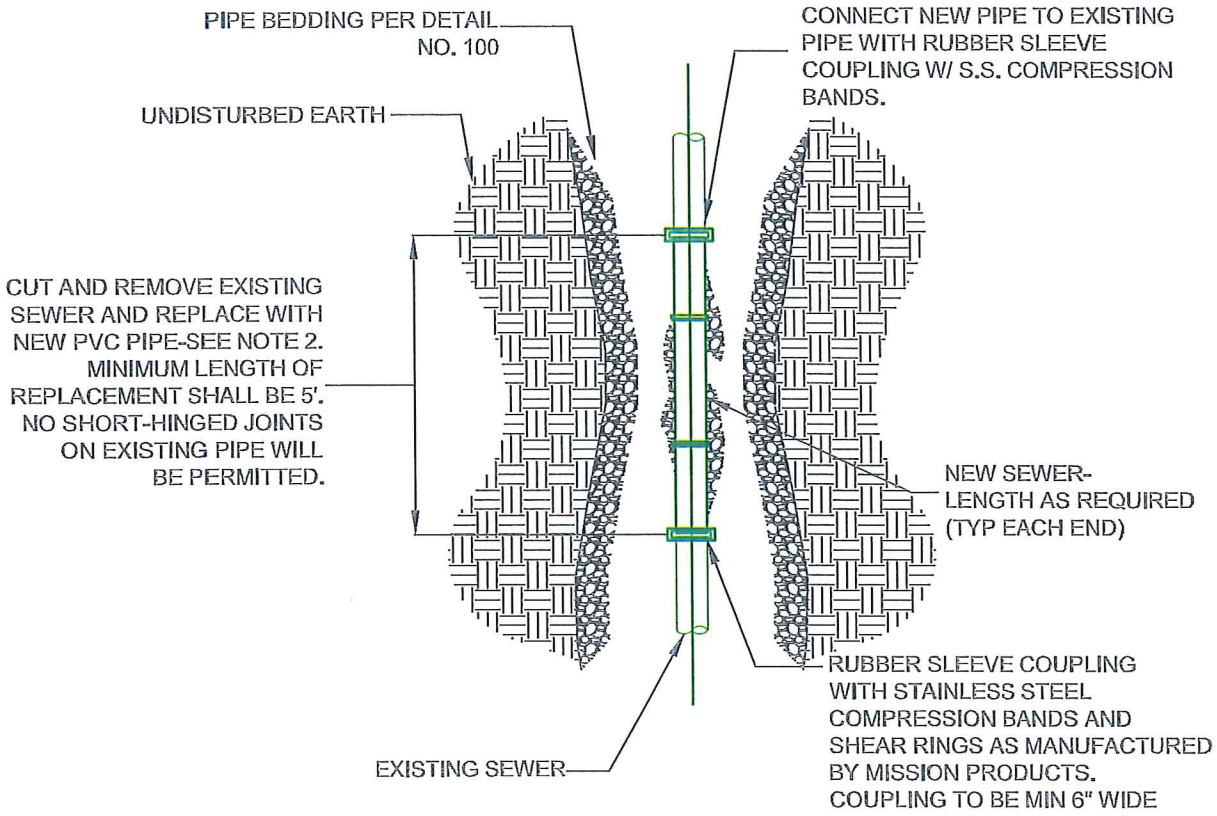


NOTES:

1. REFER TO THIS DETAIL WHEN CONNECTING POINT REPAIRS TO EXISTING SEWERS.
2. INSTALL THE NEW PIPE AT A CONSTANT SLOPE BETWEEN THE TWO EXISTING PIPE ENDS.
3. INSTALL RUBBER SLEEVE COUPLINGS AS NECESSARY TO CONNECT NEW PIPE AS SHOWN. MAIN SEWER POINT REPAIR PIPE SHALL BE PVC PIPE SIZED TO MATCH EXISTING SEWER PIPE.
4. MAIN SEWER SHALL BE INSPECTED BY CONTRACTOR VIA CLOSED CIRCUIT TELEVISION (CCTV) AFTER INSTALLATION OF POINT REPAIR TO VERIFY PROPER ALIGNMENT OF NEW SEWER AND PROPER CONNECTION TO EXISTING SEWER. ANY OFFSET JOINTS OR MISALIGNMENT SHALL BE CORRECTED PRIOR TO ACCEPTANCE BY TOWN. THE CCTV INSPECTION TAPE AND LOG SHALL BE SUBMITTED TO TOWN FOR REVIEW AND APPROVAL AND SHALL CLEARLY SHOW EACH POINT REPAIR. APPROVAL MUST BE RECEIVED FROM ENGINEER PRIOR TO THE INSTALLATION OF ANY CIPP ON A PARTICULAR SEWER LINE.

TOWN OF THURMONT
FREDERICK COUNTY, MD

POINT REPAIR
TO EXISTING SEWER

| | | | | | | | DETAIL NO. |
|---|---|---|---|---|---|---|---|
| No. | Date | By | Revision | Scale | Approved By | Date | 118 |

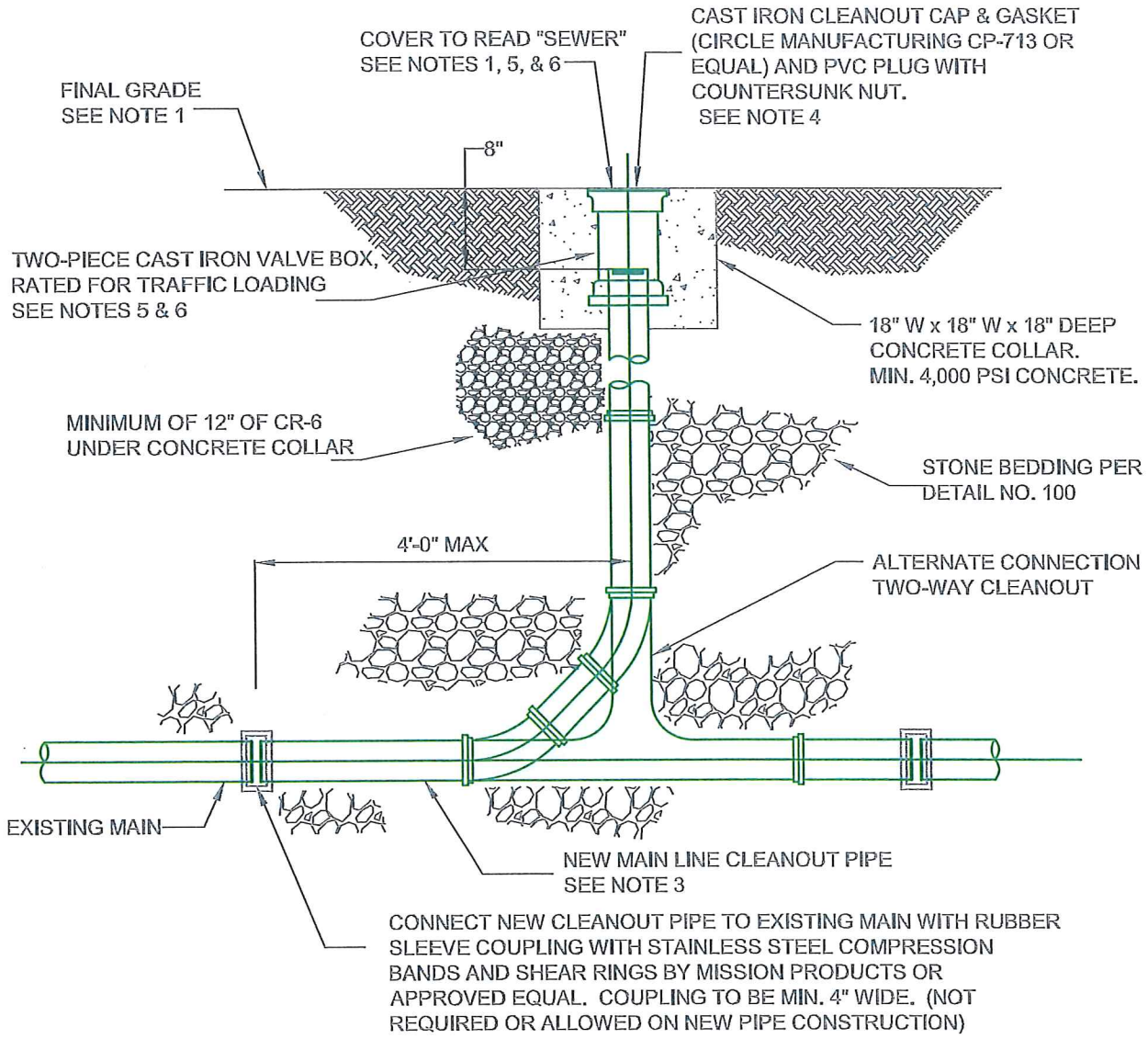


NOTES:

1. CLEANOUT COVER TO BE FLUSH WITH THE FINAL GRADE.
2. LOCATION OF CLEANOUT TO BE FIELD APPROVED BY TOWN/ENGINEER. MAIN CLEANOUTS SHALL BE INSTALLED AS SHOWN IN THE CONTRACT DOCUMENTS OR AS REQUIRED BY TOWN/ENGINEER.
3. CLEANOUT PIPE AND FITTINGS SHALL BE THE SAME PIPE MATERIAL UNLESS APPROVED OTHERWISE BY TOWN/ENGINEER.
4. ALTERNATE CLEANOUT CAPS MUST BE APPROVED BY TOWN/ENGINEER.
5. VALVE BOXES SHALL BE GRAY IRON CONFORMING TO ASTM A48 CLASS 35 AND SHALL BE FULLY BITUMINOUS SEAL COATED, MIN. LENGTH OF TOP SECTION TO BE 16 INCHES.
6. INSTALL AN 18" X 18" X 18" CONCRETE COLLAR AROUND ALL CAST IRON VALVE BOXES LOCATED IN ANY ASPHALT OR CONCRETE PAVED AREA, OR AS DIRECTED BY THE TOWN/ENGINEER.
7. FOR GRASSED AREAS, CONCRETE COLLAR AND THE 2-PIECE CAST IRON VALVE BOX ARE NOT REQUIRED.
8. MAIN LINE CLEANOUT SHALL BE THE SAME SIZE AS THE SEWER MAIN EXCEPT AS OTHERWISE NOTED.

TOWN OF THURMONT
FREDERICK COUNTY, MD

MAIN LINE CLEANOUT DETAIL-
TYPE I

| | | | | | | | DETAIL NO. |
|---|---|---|---|---|---|---|---|
| | | | | | | | 119 |
| No. | Date | By | Revision | Scale | Approved By | Date | |

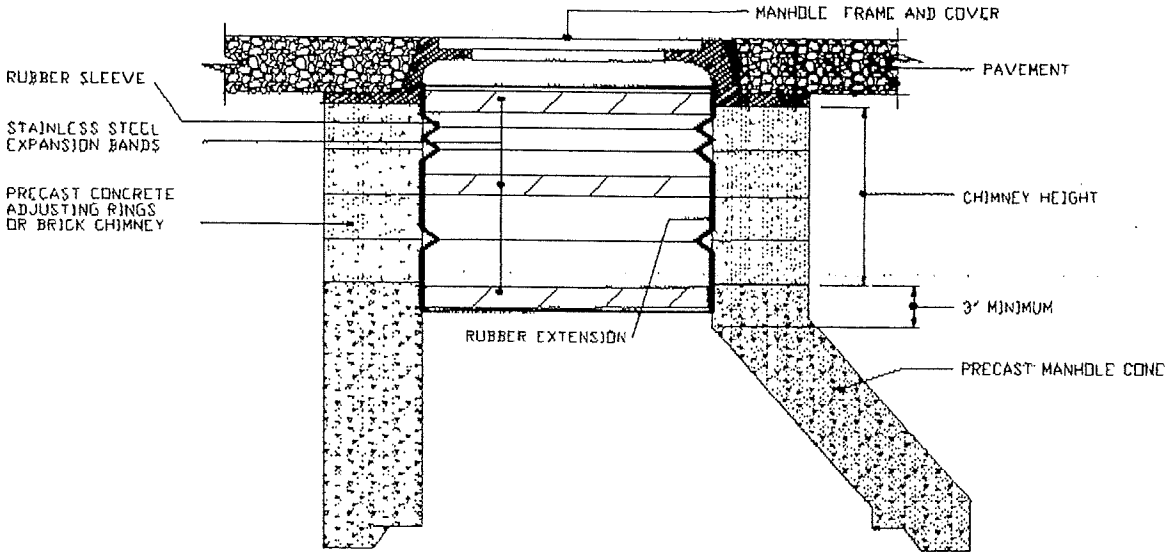


## SECTIONAL VIEW PRECAST CONE AND CHIMNEY

Notes:

1. The rubber sleeve is available in both standard, a 8.5" wide double pleated, or WIDE, a 10" wide triple pleated, cross sections. The same expansion bands and extensions are used on both.

2. See chimney height table for seal and extension combinations needed to span from the frame to the top of the cone on manholes with various chimney heights. Frame offsets or diameter differentials will reduce these span heights.

3. The top of the cone must have a minimum 3' high vertical surface that is smooth and free of any form offsets or excessive honeycomb. If a 3' high vertical surface is not available due to the existing configuration of the existing manhole cone, one may be created using a cone disk form and a non shrink patching mortar. Plans for a form disk cone are available from Cretex Specialty Products.

## CHIMNEY HEIGHT TABLE

| COMBINATIONS OF SEALS & EXTENSIONS | TO SPAN HEIGHTS OF: | |
|---|---|---|
| | W / STANDARD SEAL | W / WIDE SEAL |
| Seal Only | 0 - 4.5 | 2 - 7.5 |
| Seal + 7 Extension | Over 4.5 - 10.5 | Over 7.5 - 13.5 |
| Seal + 10 Extension | Over 10.5 - 13 | Over 13.5 - 16 |
| Seal + Mult. Extensions | Over 13 | Over 16 |
| Add 6" of coverage for each additional 7" Extension.<br>Add 8.5" of coverage for each additional 10" Extension. | | |

| INTERNAL MANHOLE CHIMNEY SEAL WITH EXTENSION - PRECAST MANHOLE | |
|---|---|
| 05\05\97 By DFD | REV. # 00001a |

Detail No
New 120

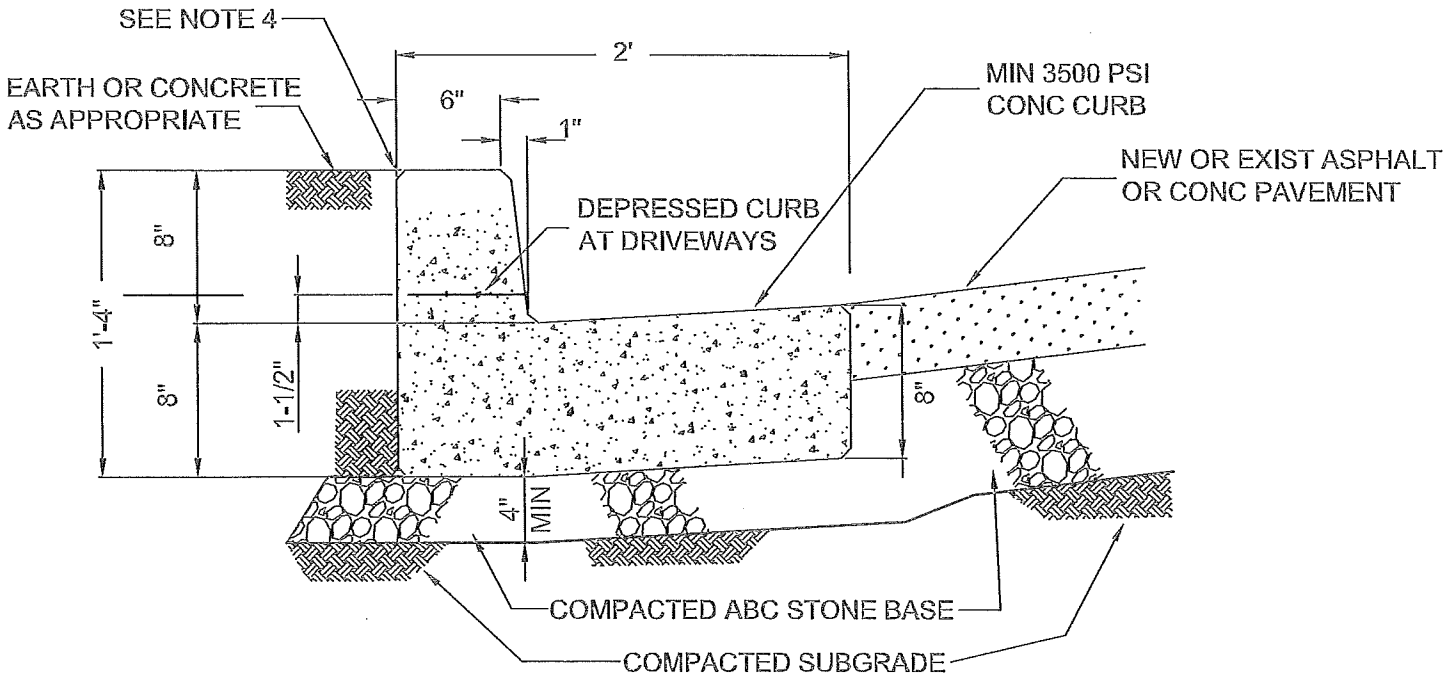


## NOTES:

1. REMOVE CURB AND GUTTER FROM EXPANSION JOINT TO EXPANSION JOINT AND REPLACE COMPLETELY UNLESS APPROVED OTHERWISE. PROVIDE NEW EXPANSION JOINTS PER NOTE 2. PROVIDE CONTROL JOINTS WHERE DIRECTED BY THE ENGINEER.

2. PROVIDE ½" EXPANSION JOINT WITH BITUMINOUS IMPREGNATED BACKER BOARD AND 1" DEEP POLYURETHANE JOINT SEALANT ON TOP AND SIDES AT 10' MAXIMUM SPACING.

3. SLOPE GUTTER PAN ½" PER FOOT TOWARDS FLOWLINE ON ALL ROADS.

4. INSTALL 3 PLY ROOFING PAPER ALONG THE BACK EDGE OF THE CURB WHEREVER CONCRETE IS TO BE INSTALLED ADJACENT (FOR EXAMPLE; SIDEWALK) PER STANDARD MD 655.01.

| | | | | | | | |
|---|---|---|---|---|---|---|---|
| | | | | TOWN OF THURMONT<br>FREDERICK COUNTY, MD | | | |
| | | | | CONCRETE CURB AND GUTTER | | | |
| | | | | | | | DETAIL NO. |
| No. | Date | By | Revision | Scale | Approved By | Date | 130 |

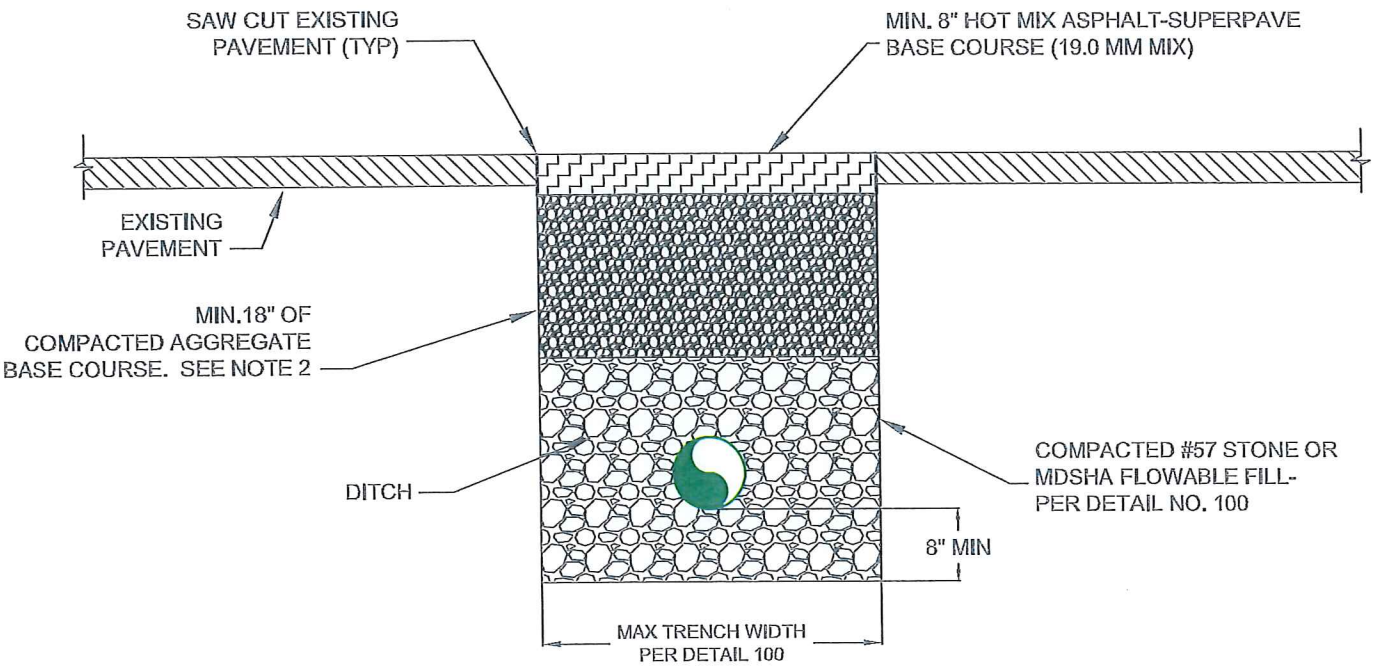


NOTES:

1. ALL PAVEMENT MATERIALS AND INSTALLATION SHALL BE IN ACCORDANCE WITH MDSHA STANDARD SPECIFICATIONS.

2. PLACE AGGREGATE BASE COURSE IN MAX. 8" LIFTS AND COMPACT TO 95% MAXIMUM DRY DENSITY PER AASHTO T180.

3. FINAL PAVEMENT PATCH MATERIALS AND COURSE THICKNESS SHALL BE EQUAL TO EXISTING PAVING SECTION, OR AT LEAST A MINIMUM TOTAL OF 8" OF HOT MIX ASPHALT MATERIAL INSTALLED IN MAXIMUM LIFT THICKNESS OF 3.0 INCHES (8 INCH HMA BASE COURSE MUST BE PLACED IN THREE LIFTS).

4. ROLL ASPHALT SMOOTH, UNIFORM AND LEVEL WITH EXISTING PAVEMENT.

5. PRIOR TO PLACING NEW ASPHALT, APPLY TACK COAT ON THE SURFACES WHERE THE ASPHALT WILL BE PLACED INCLUDING ON THE EXISTING ASPHALT AND AT ALL SAWCUT JOINTS.

6. CONTRACTOR SHALL INSTALL HOT MIX BASE COURSE AT THE END OF EACH WORK DAY TO CREATE A PATCH THAT IS LEVEL & SMOOTH WITH EXISTING PAVEMENT. WHEN WORK IN THAT SECTION IS COMPLETE, CONTRACTOR SHALL MILL AND OVERLAY AS DIRECTED-SEE DETAIL 134.

7. THE OWNER RESERVES THE RIGHT TO TEST ANY OR ALL COMPACTED FILL OR HMA PRIOR TO APPROVAL FOR PAYMENT. CONTRACTOR SHALL COOPERATE FULLY WITH TESTING LABORATORY PERSONNEL.

TOWN OF THURMONT
FREDERICK COUNTY, MD

ASPHALT PAVEMENT PATCH
8" HMA BASE COURSE

| | | | | | | | DETAIL NO. |
|---|---|---|---|---|---|---|---|
| | | | | | | | 131 |
| No. | Date | By | Revision | Scale | Approved By | Date | |

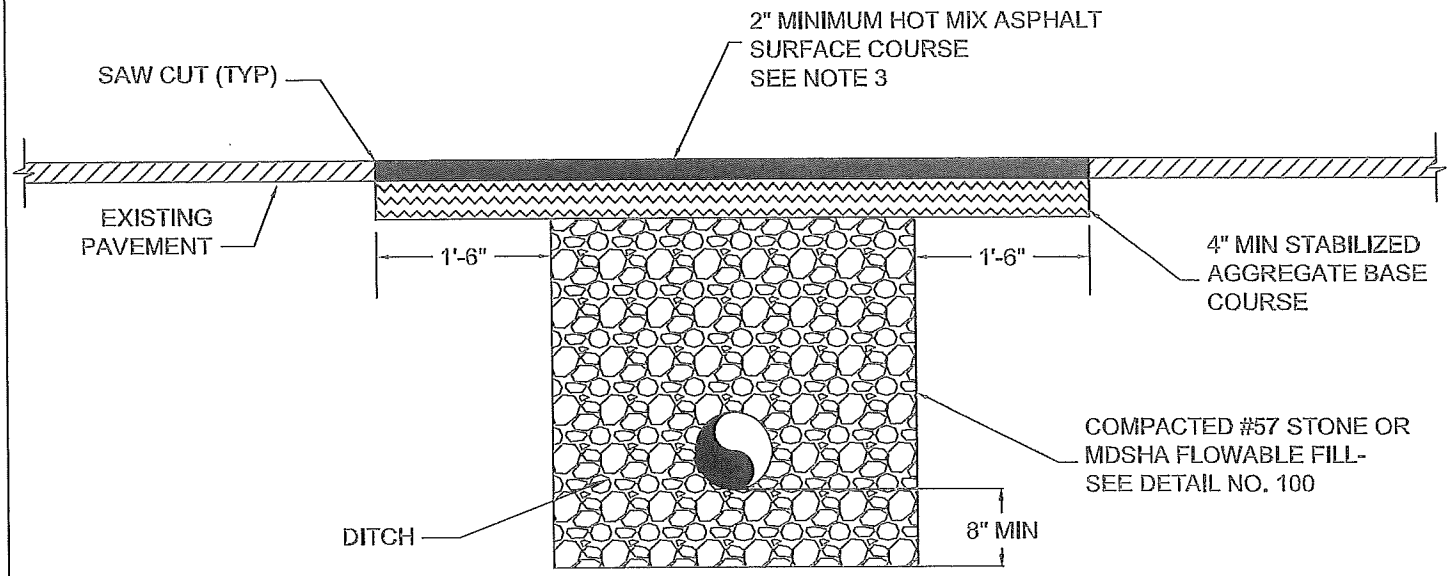


NOTES:

1. ALL PAVEMENT MATERIALS AND INSTALLATION SHALL BE IN ACCORDANCE WITH MDSHA STANDARD SPECIFICATIONS. THIS DETAIL SHALL BE MODIFIED AS REQUIRED BY MDSHA.

2. ROLL ASPHALT SMOOTH, UNIFORM AND LEVEL WITH EXISTING PAVEMENT.

3. PRIOR TO PLACING NEW ASPHALT, APPLY A BONDING AGENT ON THE SURFACES WHERE THE ASPHALT WILL BE PLACED, ON THE EXISTING ASPHALT AND AT ALL SAWCUT JOINTS.

4. ASPHALT OVERLAY TO BE INSTALLED AS REQUIRED BY MDSHA, COUNTY, TOWN OR ENGINEER PER DETAIL.

TOWN OF THURMONT
FREDERICK COUNTY, MD

ASPHALT PAVEMENT PATCH
IN A STATE ROAD

| No. | Date | By | Revision | Scale | Approved By | Date | DETAIL NO. |
|---|---|---|---|---|---|---|---|
| | | | | | | | 131 |

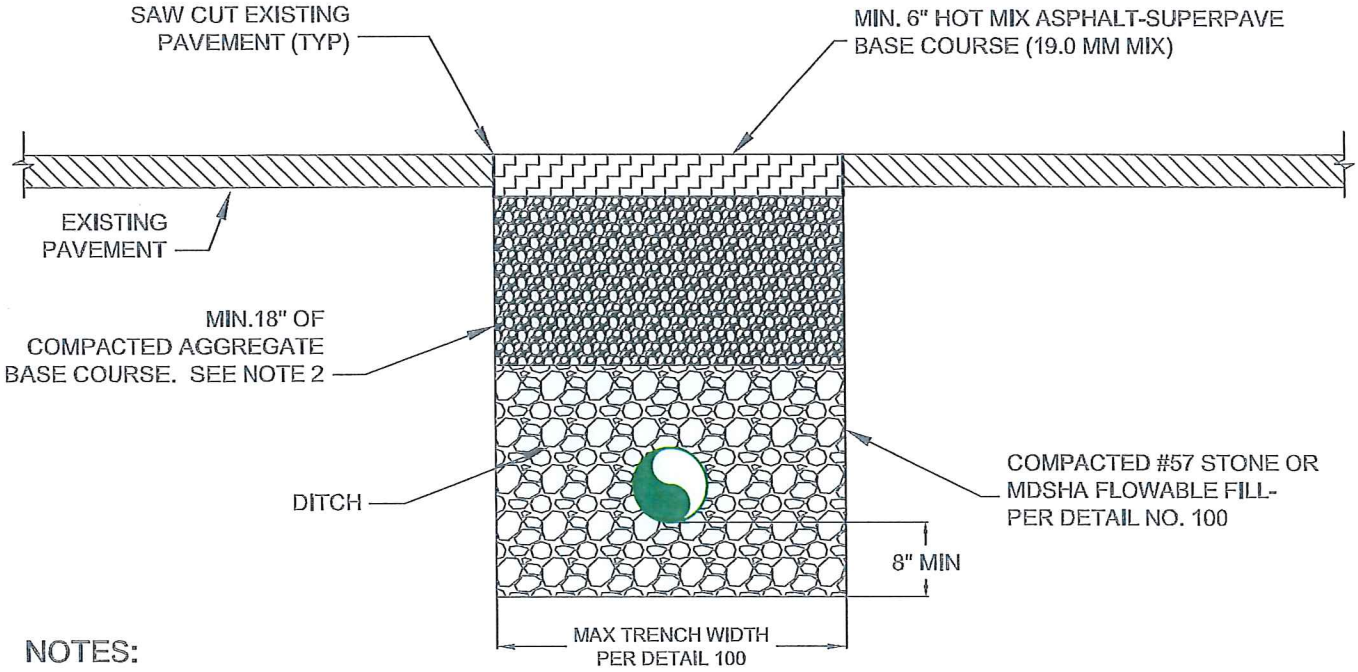


NOTES:

1. ALL PAVEMENT MATERIALS AND INSTALLATION SHALL BE IN ACCORDANCE WITH MDSHA STANDARD SPECIFICATIONS.

2. PLACE AGGREGATE BASE COURSE IN MAX. 8" LIFTS AND COMPACT TO 95% MAXIMUM DRY DENSITY PER AASHTO T180.

3. FINAL PAVEMENT PATCH MATERIALS AND COURSE THICKNESS SHALL BE EQUAL TO EXISTING PAVING SECTION, OR AT LEAST A MINIMUM TOTAL OF 8" OF HOT MIX ASPHALT MATERIAL INSTALLED IN MAXIMUM LIFT THICKNESS OF 3.0 INCHES (6 INCH HMA BASE COURSE MUST BE PLACED IN TWO LIFTS).

4. ROLL ASPHALT SMOOTH, UNIFORM AND LEVEL WITH EXISTING PAVEMENT.

5. PRIOR TO PLACING NEW ASPHALT, APPLY TACK COAT ON THE SURFACES WHERE THE ASPHALT WILL BE PLACED INCLUDING ON THE EXISTING ASPHALT AND AT ALL SAWCUT JOINTS.

6. CONTRACTOR SHALL INSTALL HOT MIX BASE COURSE AT THE END OF EACH WORK DAY TO CREATE A PATCH THAT IS LEVEL & SMOOTH WITH EXISTING PAVEMENT. WHEN WORK IN THAT SECTION IS COMPLETE, CONTRACTOR SHALL MILL AND OVERLAY AS DIRECTED-SEE DETAIL 134.

7. THE OWNER RESERVES THE RIGHT TO TEST ANY OR ALL COMPACTED FILL OR HMA PRIOR TO APPROVAL FOR PAYMENT. CONTRACTOR SHALL COOPERATE FULLY WITH TESTING LABORATORY PERSONNEL.

TOWN OF THURMONT
FREDERICK COUNTY, MD

ASPHALT PAVEMENT PATCH
6" HMA BASE COURSE

| No. | Date | By | Revision | Scale | Approved By | Date | DETAIL NO. |
|---|---|---|---|---|---|---|---|
| | | | | | | | 132 |

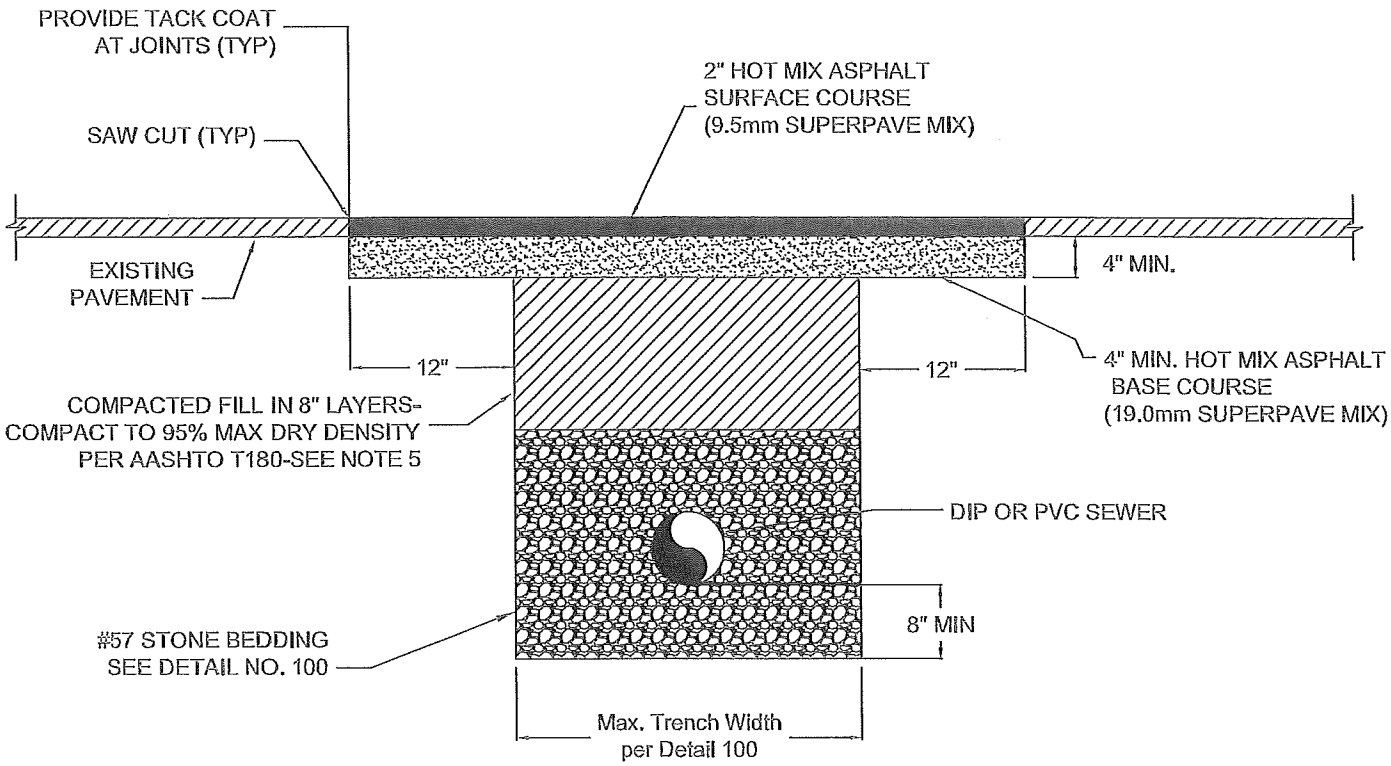


NOTES:

1. ALL PAVEMENT MATERIALS AND INSTALLATION SHALL BE IN ACCORDANCE WITH MDSHA STANDARD SPECIFICATIONS. REFER TO THE SPECIFICATIONS FOR ADDITIONAL REQUIREMENTS.

2. ROLL ASPHALT PATCH SMOOTH, UNIFORM AND LEVEL WITH EXISTING PAVEMENT.

3. INSTALL ASPHALT OVERLAY WHERE REQUIRED BY TOWN/ENGINEER PER DETAIL 134.

4. TOWN/ENGINEER RESERVES THE RIGHT TO TEST ANY OR ALL COMPACTED FILL OR HMA PRIOR TO APPROVAL FOR PAYMENT. CONTRACTOR SHALL COOPERATE FULLY WITH TESTING LABORATORY PERSONNEL.

TOWN OF THURMONT
FREDERICK COUNTY, MD

ASPHALT PAVEMENT PATCH
4" BASE & 2" SURFACE

| No. | Date | By | Revision | Scale | Approved By | Date | DETAIL NO. |
|---|---|---|---|---|---|---|---|
| | | | | | | | 133 |

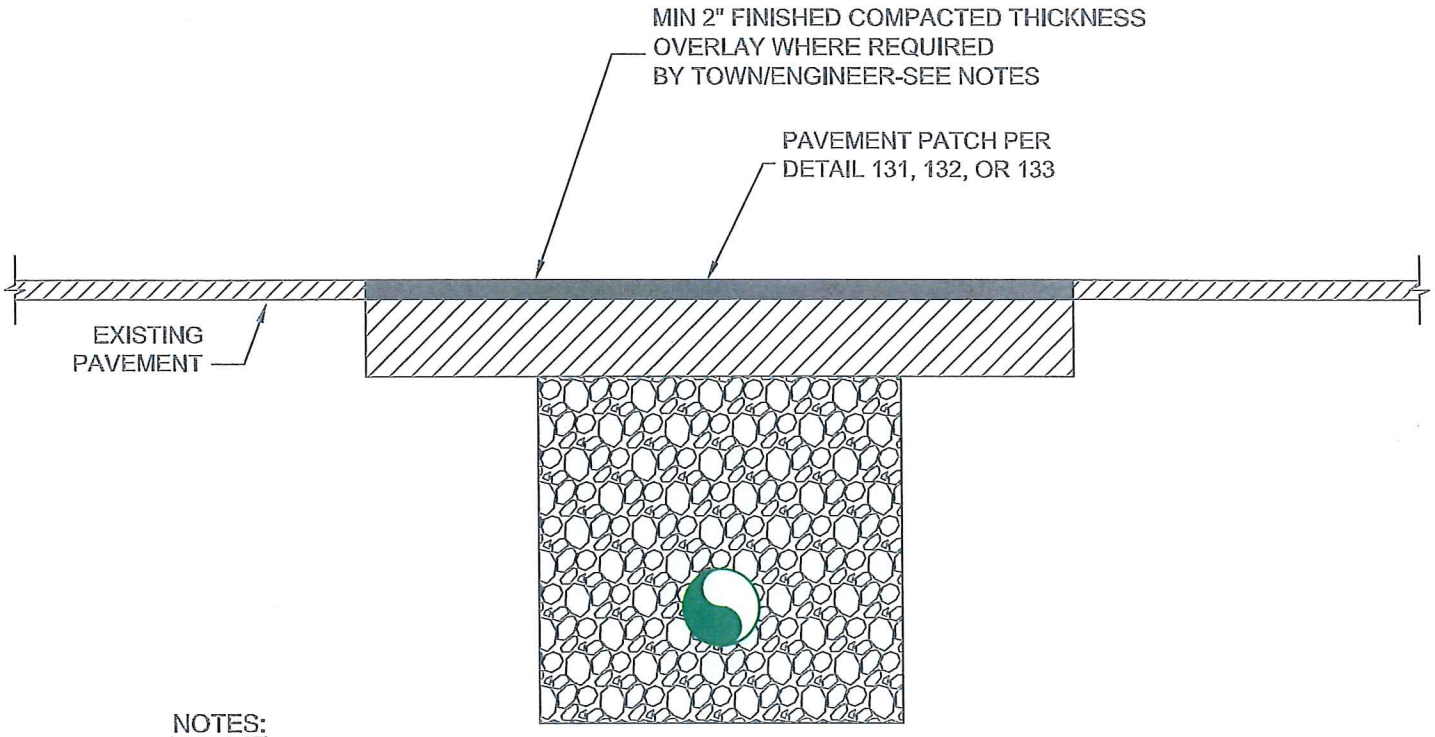


NOTES:

1. ALL PAVEMENT MATERIALS AND INSTALLATION SHALL BE IN ACCORDANCE WITH MDSHA STANDARD SPECIFICATIONS. THIS DETAIL SHALL BE MODIFIED AS REQUIRED BY MDSHA.

2. THE LENGTH AND WIDTH OF THE OVERLAY MUST BE APPROVED BY THE ENGINEER PRIOR TO COMMENCEMENT OF THE WORK. NO PAYMENT WILL BE MADE FOR MILLING OR ASPHALT OVERLAY QUANTITIES INSTALLED WITHOUT PRIOR APPROVAL.

3. MILL PATCHED ASPHALT SURFACE DOWN 2" SO THAT PLACEMENT OF THE NEW 2" OVERLAY WILL CREATE A SMOOTH, RIDGE FREE SURFACE.

4. OVERLAY TO BE INSTALLED WITH A PAVING MACHINE.

5. PRIOR TO PLACING NEW ASPHALT, REMOVE ALL LOOSE DEBRIS AND DUST FROM SURFACE USING COMPRESSED AIR, THEN APPLY A BONDING AGENT ON THE SURFACES WHERE THE ASPHALT WILL BE PLACED.

6. OVERLAY REQUIREMENTS SPECIFIED IN THIS DETAIL CAN ALSO APPLY TO OVERLAYS INSTALLED WHERE NO SEWER WORK (NO SEWER TRENCH) HAS OCCURRED.

7. THE OWNER RESERVES THE RIGHT TO TEST ANY OR ALL COMPACTED FILL OR HMA PRIOR TO APPROVAL FOR PAYMENT. CONTRACTOR SHALL COOPERATE FULLY WITH TESTING LABORATORY PERSONNEL.

8. 2" OVERLAY SHALL BE HMA SUPERPAVE, 9.5mm MIX OR AS DIRECTED BY MD SHA.

TOWN OF THURMONT
FREDERICK COUNTY, MD

ASPHALT OVERLAY

| No. | Date | By | Revision | Scale | Approved By | Date | DETAIL NO. |
|---|---|---|---|---|---|---|---|
| | | | | | | | 134 |

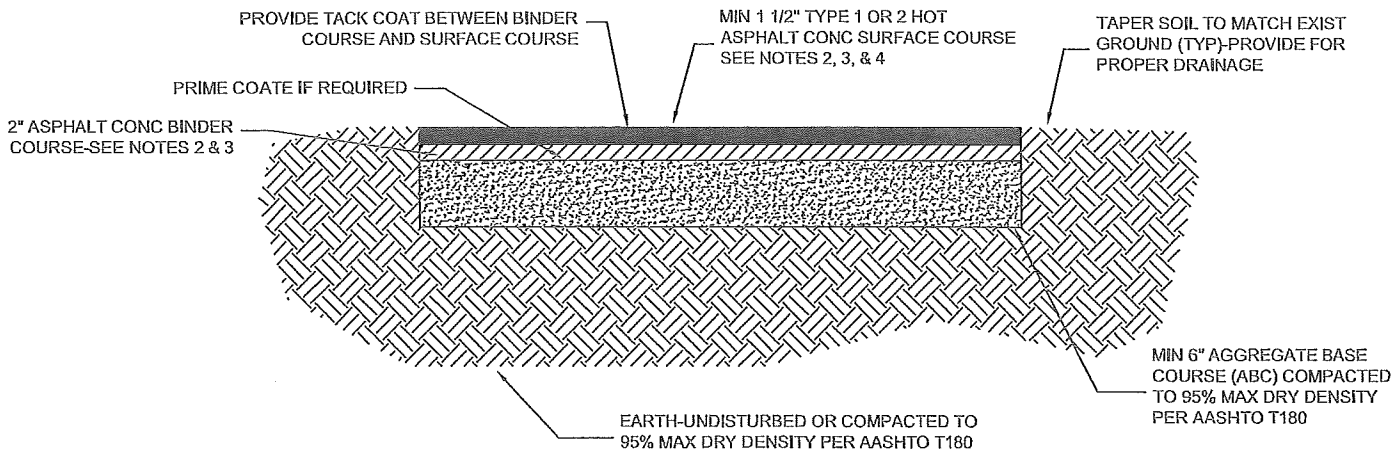


NOTES:

1. REFER TO THIS DETAIL WHEN REPLACING PAVED PARKING LOTS AND PRIVATE ROADS.

2. ALL PAVEMENT MATERIALS AND INSTALLATION SHALL BE IN ACCORDANCE WITH MDSHA STANDARD SPECIFICATIONS. REFER TO THE SPECIFICATIONS FOR ADDITIONAL REQUIRMENTS.

3. PAVEMENT TO BE INSTALLED TO MATCH PRE-CONSTRUCTION ELEVATIONS, SLOPES AND CONFIGURATIONS. DRAINAGE PATTERN TO BE MAINTAINED. RE-STRIPE PARKING SPACES AND INSTALL SPEED BUMPS PER PRE-CONSTRUCTION LOCATIONS AS APPLICABLE.

4. PAVEMENT THICKNESS TO BE INCREASED TO MATCH EXISTING PAVEMENT THICKNESS AS APPLICABLE. MIN THICKNESS TO BE 1 1/2".

5. TOWN/ENGINEER MAY REQUIRE THAT COMPACTION TESTS BE PERFORMED TO CONFIRM PROPER COMPACTION PRIOR TO PLACING ABC STONE AND PAVEMENT.

TOWN OF THURMONT
FREDERICK COUNTY, MD

ASPHALT RESTORATION FOR PARKING LOTS AND PRIVATE ROADS

| | | | | | | | DETAIL NO. |
|---|---|---|---|---|---|---|---|
| | | | | | | | 135 |
| No. | Date | By | Revision | Scale | Approved By | Date | |

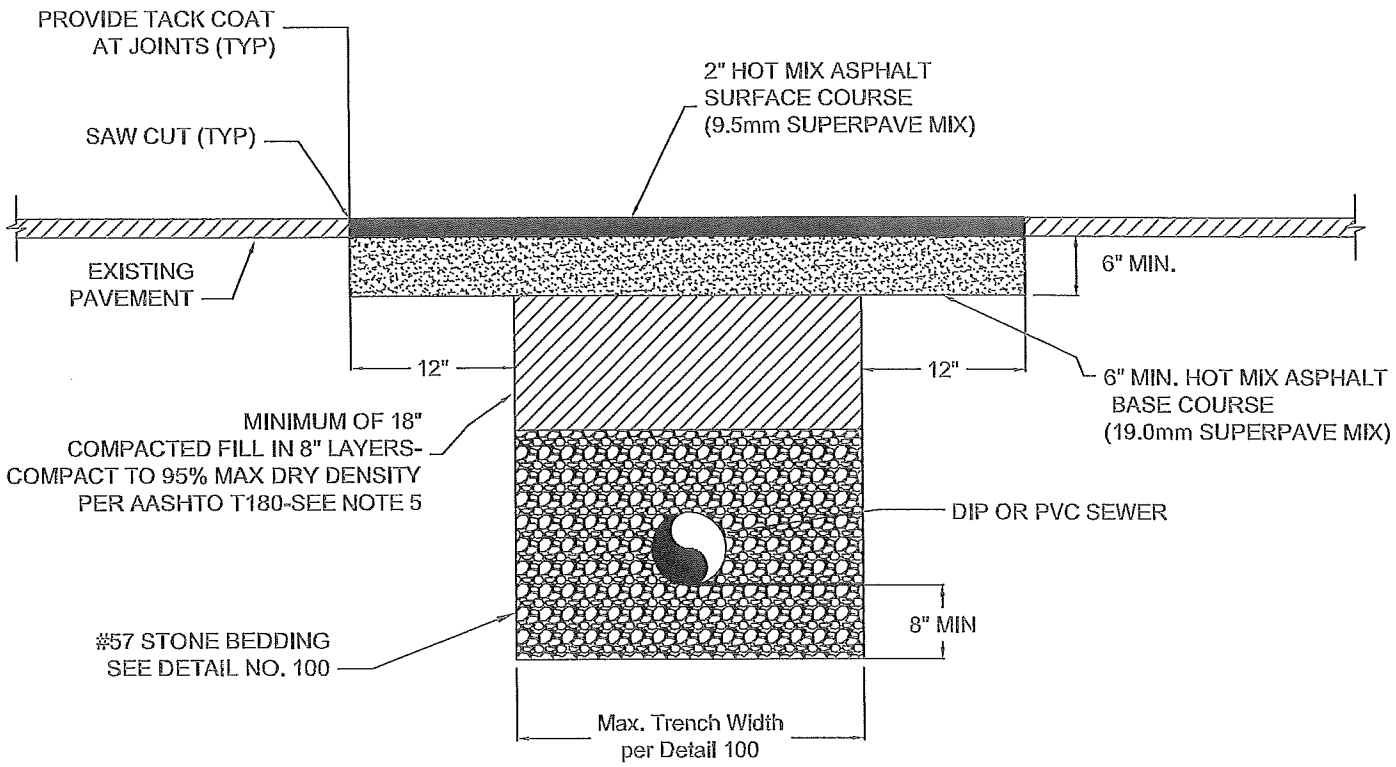


NOTES:

1. ALL PAVEMENT MATERIALS AND INSTALLATION SHALL BE IN ACCORDANCE WITH MDSHA STANDARD SPECIFICATIONS. REFER TO THE SPECIFICATIONS FOR ADDITIONAL REQUIREMENTS.

2. ROLL ASPHALT PATCH SMOOTH, UNIFORM AND LEVEL WITH EXISTING PAVEMENT.

3. INSTALL ASPHALT OVERLAY WHERE REQUIRED BY TOWN/ENGINEER PER DETAIL 134.

4. TOWN/ENGINEER RESERVES THE RIGHT TO TEST ANY OR ALL COMPACTED FILL OR HMA PRIOR TO APPROVAL FOR PAYMENT. CONTRACTOR SHALL COOPERATE FULLY WITH TESTING LABORATORY PERSONNEL.

| TOWN OF THURMONT<br>FREDERICK COUNTY, MD | | | | | | | |
|---|---|---|---|---|---|---|---|
| ASPHALT PAVEMENT PATCH<br>6" BASE & 2" SURFACE | | | | | | | |
| | | | | | | | DETAIL NO.<br>136 |
| No. | Date | By | Revision | Scale | Approved By | Date | |

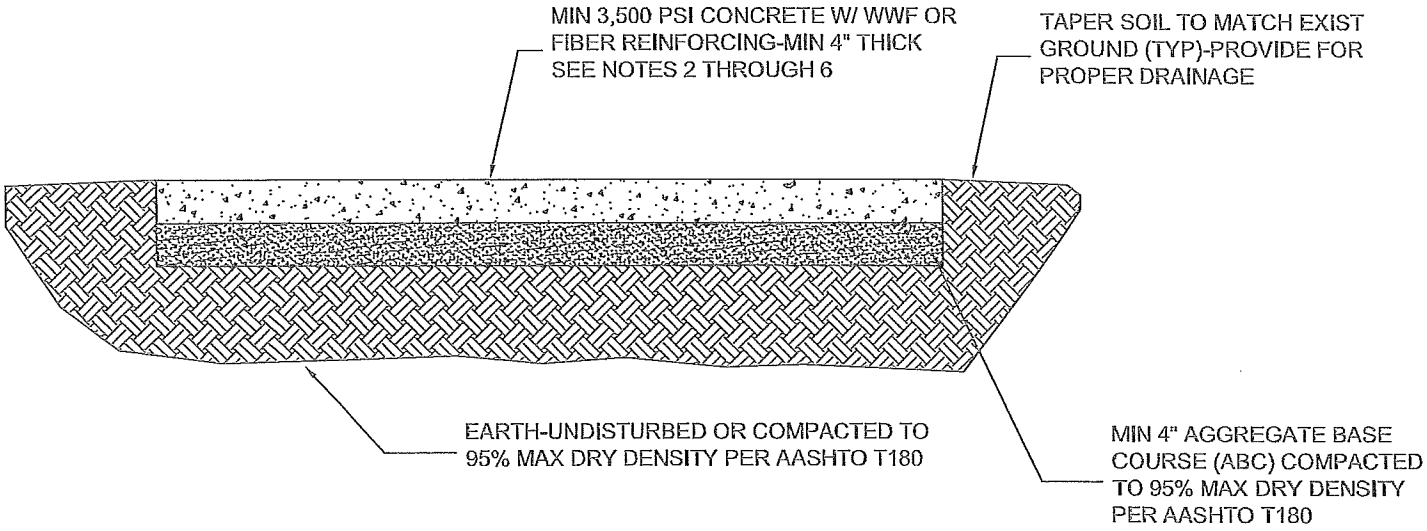


NOTES:

1. REFER TO THIS DETAIL WHEN REPLACING CONCRETE DRIVEWAYS, PARKING LOTS, AND SIDEWALKS.

2. REFER TO THE SPECIFICATIONS FOR ADDITIONAL REQUIREMENTS.

3. CONCRETE TO BE INSTALLED TO MATCH PRE-CONSTRUCTION ELEVATIONS, SLOPES AND CONFIGURATIONS. DRAINAGE PATTERN TO BE MAINTAINED. INSTALL DRAINAGE PIPES AND CULVERTS PER PRE-CONSTRUCTION CONDITIONS AS APPLICABLE.

4. CONCRETE THICKNESS TO BE INCREASED TO MATCH EXISTING PAVEMENT THICKNESS AS APPLICABLE. MIN THICKNESS TO BE 4".

5. REMOVE EXISTING CONCRETE FROM EXPANSION JOINT TO EXPANSION JOINT AND REPLACE COMPLETELY UNLESS APPROVED OTHERWISE. PROVIDE NEW EXPANSION JOINTS PER NOTE 6. PROVIDE CONTROL JOINTS WHERE DIRECTED BY THE ENGINEER.

6. PROVIDE 1/2" EXPANSION JOINT WITH BITUMINOUS IMPREGNATED BACKER BOARD AND 1" DEEP POLYURETHANE JOINT SEALANT ON TOP AND SIDES AT 8' MAX SPACING UNLESS APPROVED OTHERWISE.

7. IN SOME INSTANCES, THE CONCRETE THICKNESS FOR DRIVEWAYS AND PARKING LOTS MAY BE INCREASED TO 6" OR 8" TO SUPPORT TRAFFIC LOADINGS. ALSO, THE BASE COURSE WILL BE INCREASED TO 6" AS DIRECTED BY THE ENGINEER.

TOWN OF THURMONT
FREDERICK COUNTY, MD

CONCRETE DRIVEWAYS, PARKING LOTS AND SIDEWALKS

| | | | | | | | DETAIL NO. |
|---|---|---|---|---|---|---|---|
| No. | Date | By | Revision | Scale | Approved By | Date | 137 |

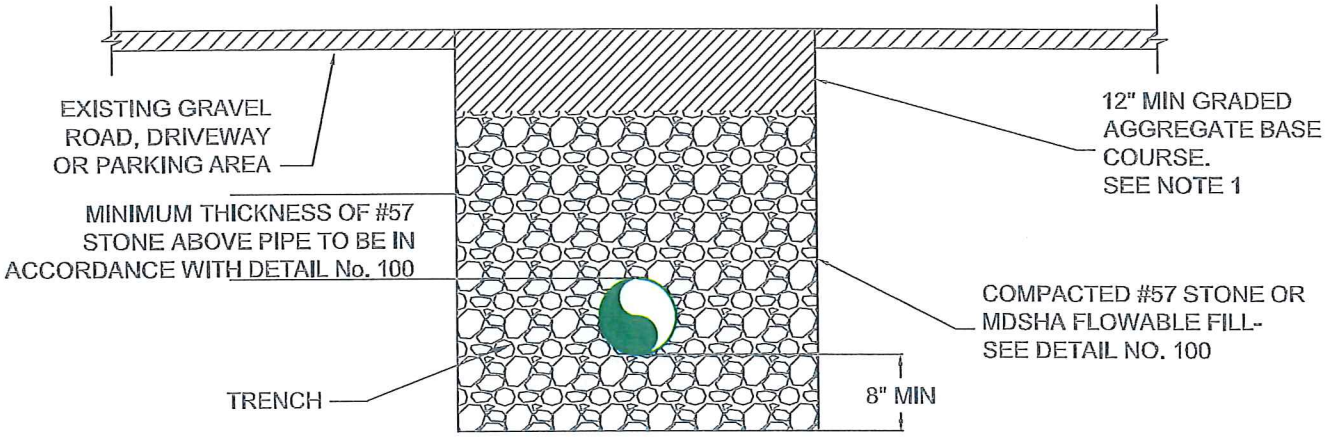


NOTES:

1. AGGREGATE BASE COURSE SHALL BE COMPACTED TO 95% MAX DRY DENSITY PER AASHTO T180.

TOWN OF THURMONT
FREDERICK COUNTY, MD

STONE/GRAVEL ROAD, DRIVEWAY, OR PARKING AREA RESTORATION

| | | | | | | | DETAIL NO. |
|---|---|---|---|---|---|---|---|
| No. | Date | By | Revision | Scale | Approved By | Date | 138 |

PARSON ENVIRONMENTAL PRODUCTS, INC.

# PARSON MANHOL INSERT

*THE TOUGH ONE*

*The most reliable, durable, cost-effective manhole insert available, and we guarantee it!*

## DESCRIPTION:

PARSON MANHOLE INSERTS are made of high density polyethylene and have been proven effective in reducing or preventing surface water inflow to the collection system, through the manhole lid. Operating and maintenance costs for plant equipment and pumps is minimized, due to reduced flow during heavy rainfall. Also, utility costs are reduced because machinery is not operating for extended periods of time. These inserts are a practical solution to expensive plant expansions, new construction moratoriums or inflationary sewage treatment costs.

## ADVANTAGES:

- The only manhole insert GUARANTEED for THREE years against manufacturing defects
- Patented "NO VALVE," or valve-type method of ventilation available
- NO corrosive parts
- Easy installation and removal
- Keeps grit, sand, salt, chemical spills, foreign objects, road oils, etc. from entering collection systems
- Controls sewer odors in residential areas
- Requires no maintenance
- Dramatically reduce sewage treatment costs
- Cost-effective alternative to replacing existing manhole covers with "water-tight" covers
- Deep and shallow bowl designs available

## PERFORMANCE DATA & PHYSICAL PROPERTIES:

PARSON MANHOLE INSERTS are manufactured from High Density Polyethylene, meeting the requirements of ASTM D-1248, Class A, Category 5, with a finish thickness of 1/8". Ventilation is achieved by the use of our patented "thru-bore" method or valve-type method, either being effective to insure adequate results. A nylon strap is factory installed to make removal of the unit a simple, one person operation. Factory installed gasket available upon request.

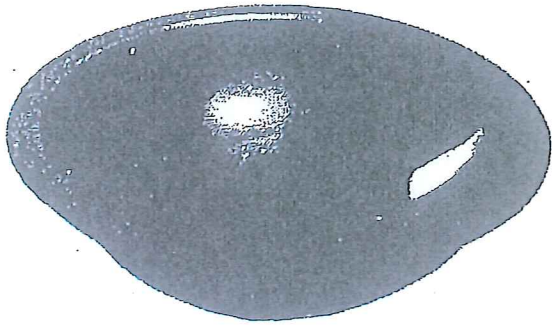

#139 Deta

## INFLOW TEST RESULTS:

As the following graph illustrates, over 40 gallons of surface water inflow can pass through a single manhole cover and into the sanitary sewer collection system during a heavy rain. PARSON MANHOLE INSERTS are designed to drastically reduce or eliminate this costly surface water inflow problem.

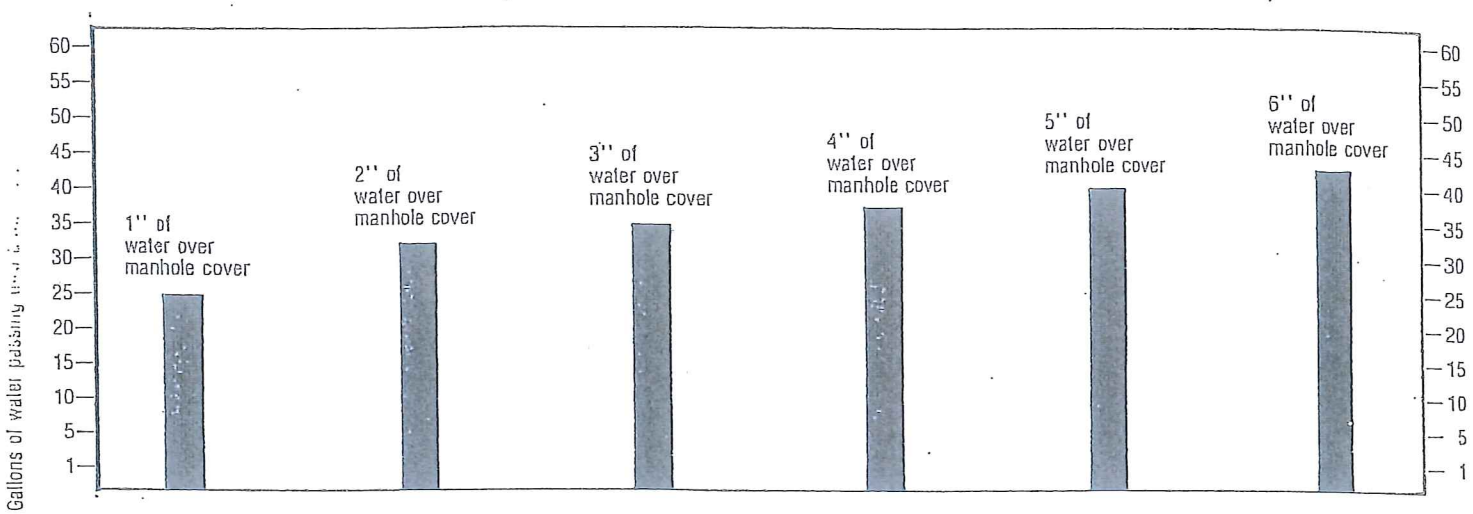


## INSTALLATION:

No special tools are required to install PARSON MANHOLE INSERTS. Just remove the manhole cover and clean the rim of the frame. Place the PARSON MANHOLE INSERT on the manhole frame rim and replace the manhole cover.

### MEASUREMENTS NEEDED FOR PROPER INSTALLATION OF PARSON MANHOLE INSERTS

*(Please enclose a copy of this drawing with your order)*

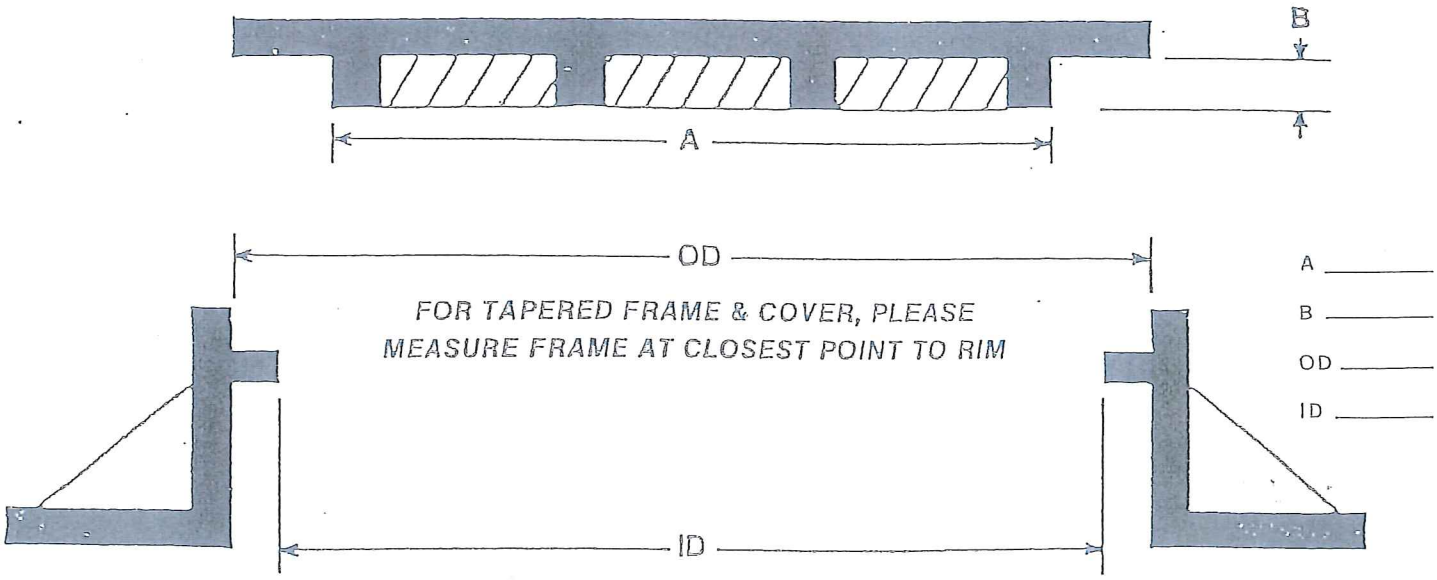


PARSON ENVIRONMENTAL PRODUCTS, INC.

P.O. BOX 4474
READING, PA 19606
(215) 582-6060
FAX (215) 582-6064

TOLL FREE:
(800) 356-9023

DETAIL # 140

| Main Dia | 4" | 6" | 8" | 10" | 12" |
|---|---|---|---|---|---|
| A (min) | 4'-10" | 5'-1" | 5'-6" | 5'-9" | 6'-0" |

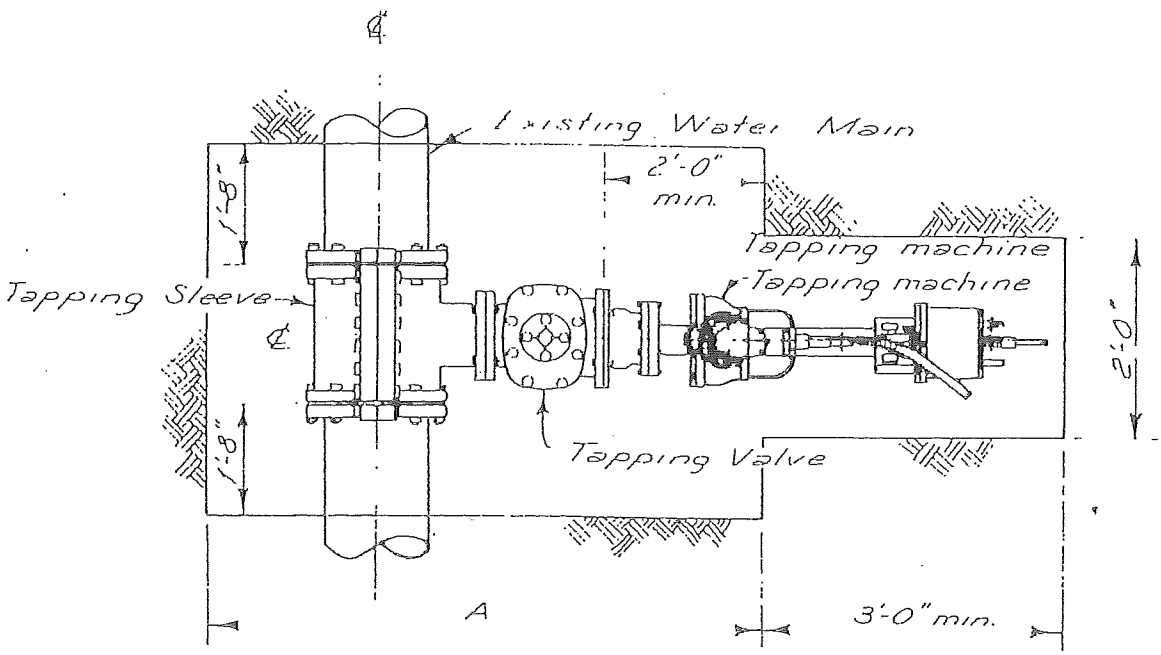


Plan

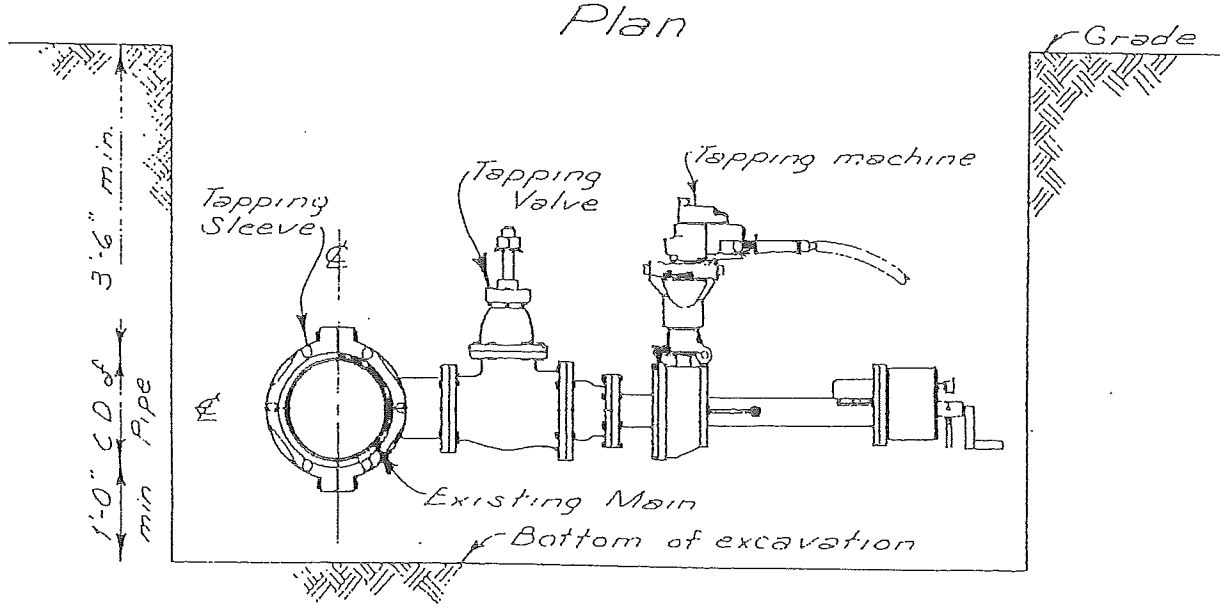


After tapping, buttress per Detail

Elevation

Not to Scale

RCH

| Commissioners of Thurmont | Revisions: Date / Note | Tapping Sleeve and Valve Installation | Detail No. 201 |
|---|---|---|---|
| | | | Date: 6-2-82 |

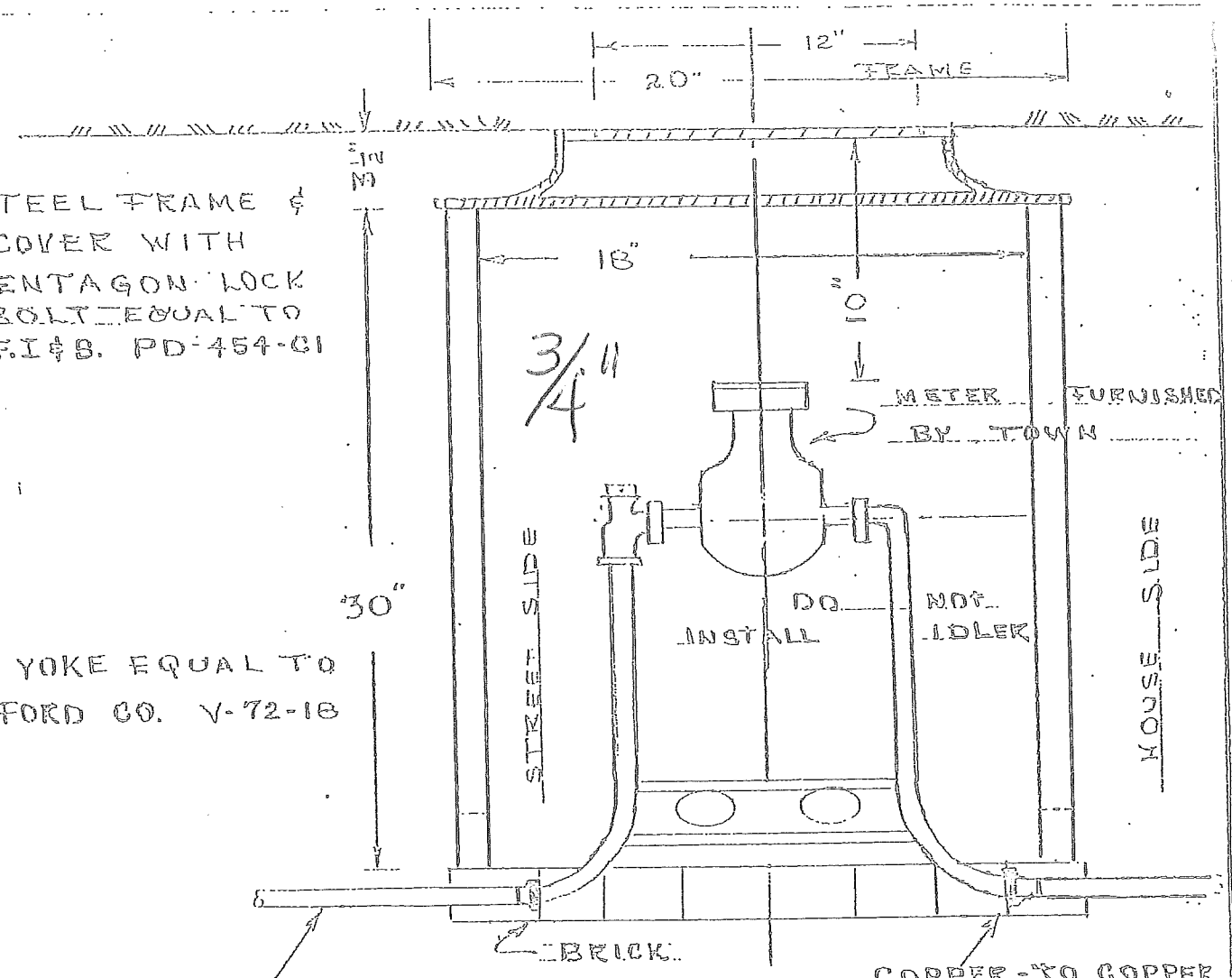


14" x 22" Bullet

REVISED: 8-1-85

| | | |
|---|---|---|
| Commissioners of Thurmont | 3/4" AND 1" WATER METER SETTING | DETAIL NO. 202 DATE: 6-2-82 |

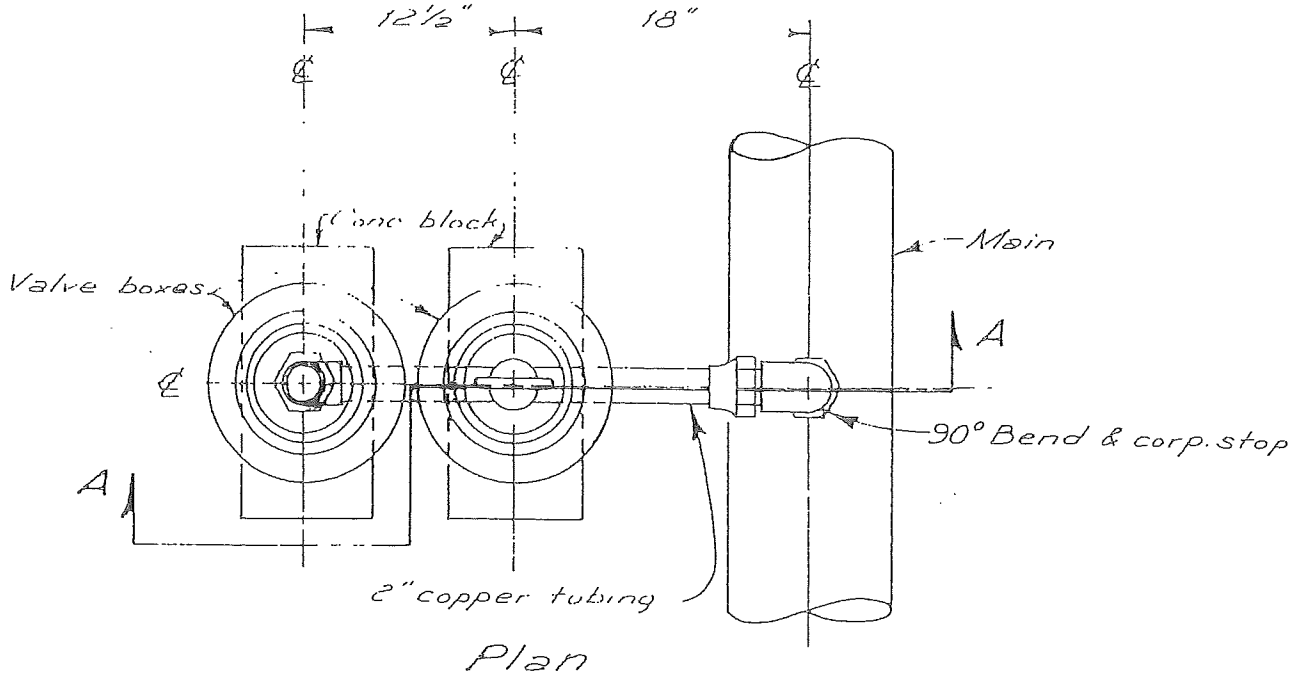


Plan

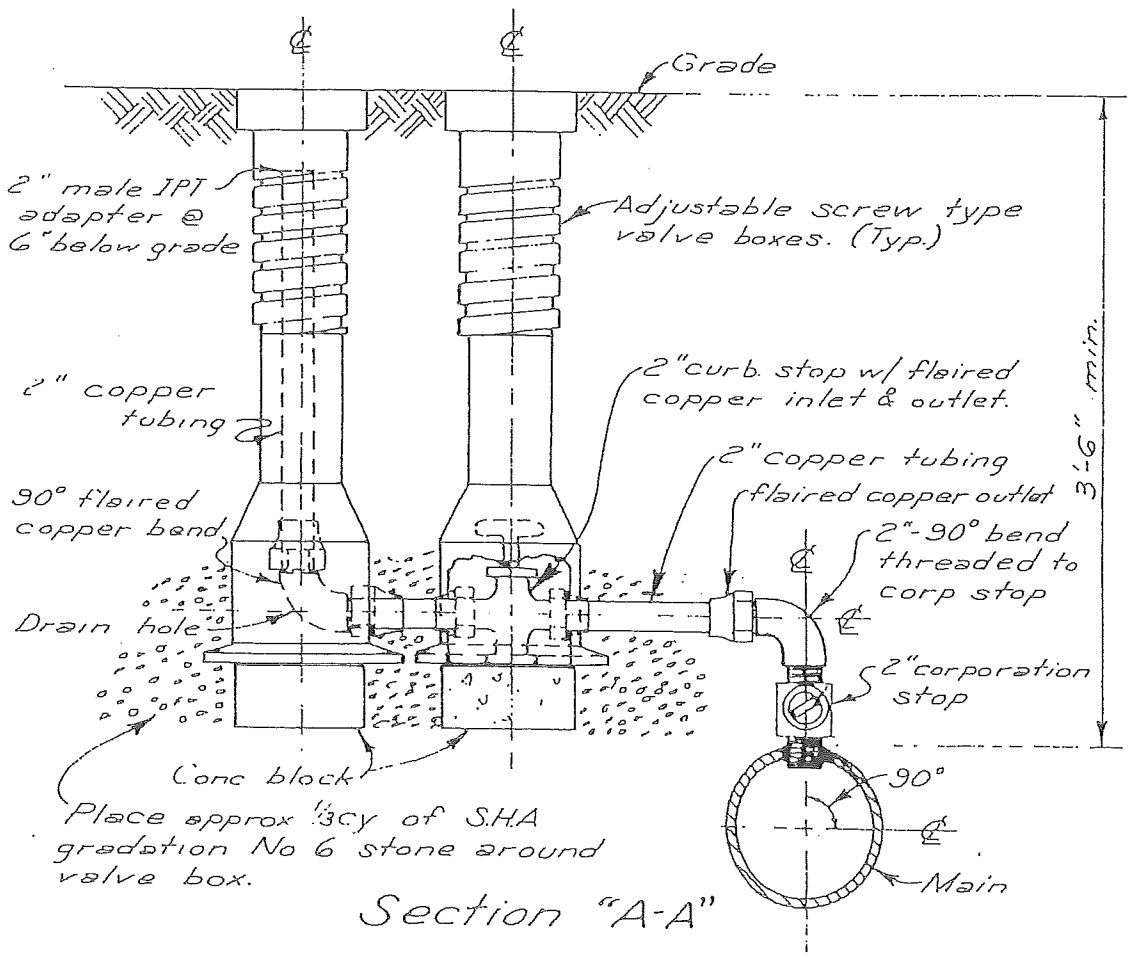


Section "A-A"

KCH

| Commissioners of Thurmont | Revisions Date / Note | Manual Air Release Valve | Detail No. 203 |
|---|---|---|---|
| | | | Date: 6-2-82 |

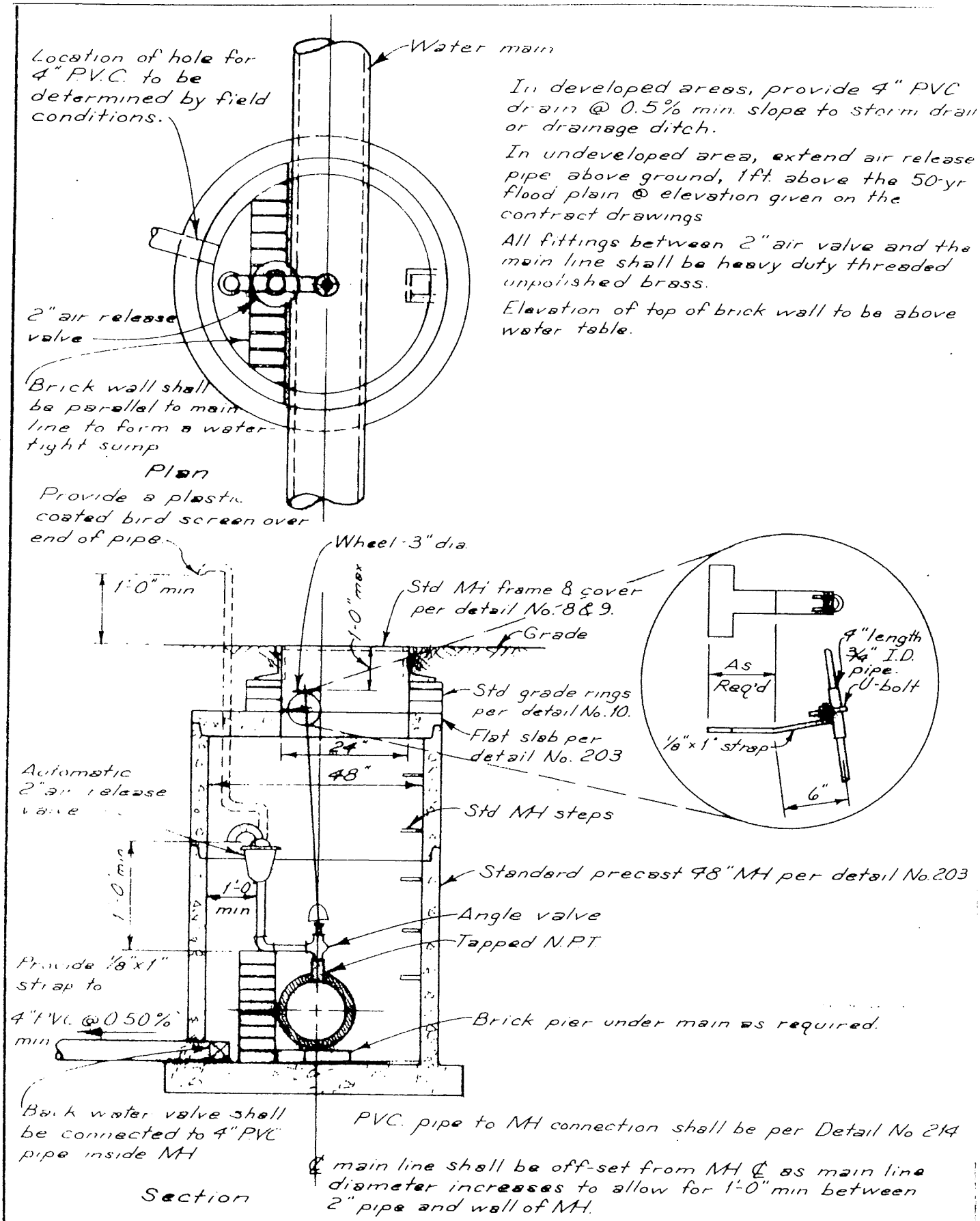


In developed areas, provide 4" PVC drain @ 0.5% min. slope to storm drain or drainage ditch.

In undeveloped area, extend air release pipe above ground, 1ft. above the 50-yr flood plain @ elevation given on the contract drawings

All fittings between 2" air valve and the main line shall be heavy duty threaded unpolished brass.

Elevation of top of brick wall to be above water table.

PVC. pipe to MH connection shall be per Detail No 214

℄ main line shall be off-set from MH ℄ as main line diameter increases to allow for 1'-0" min between 2" pipe and wall of MH.

K.C.H

| Commissioners of Thurmont | Revisions: Date / Note | 2" Air Valve in MH for 24" & Smaller Water Mains | Detail No. 204 |
|---|---|---|---|
| | | | Date: 6-2-82 |

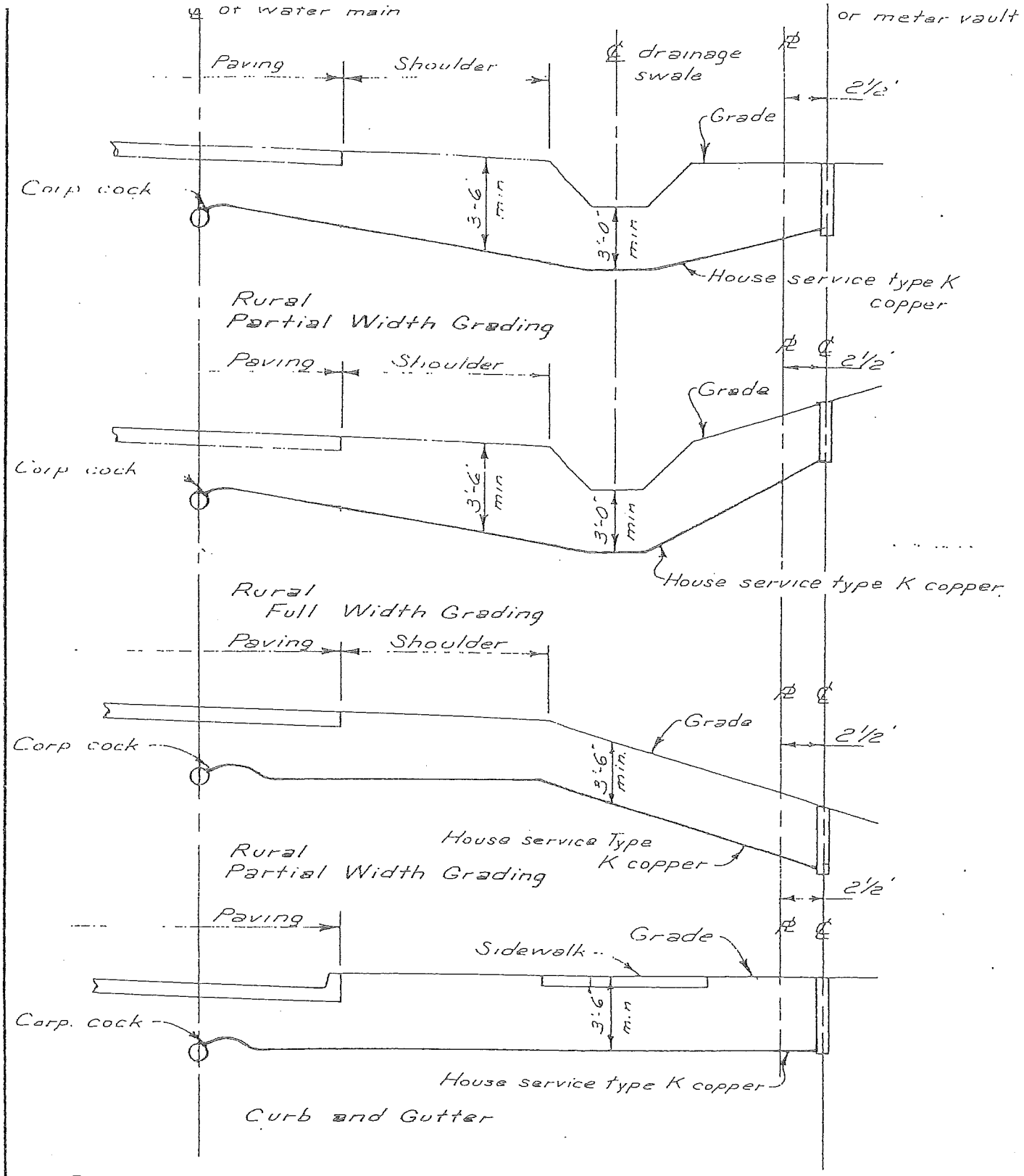


Curb stop or meter vault shall be provided with a plug or cap unless house is connected immediately.

K.C.H.

| Commissioners of Thurmont | Revisions Date / Note | ¾", 1", 1½", & 2" Water House Connections | Detail No. 205 |
|---|---|---|---|
| | | | Date 6-2-82 |

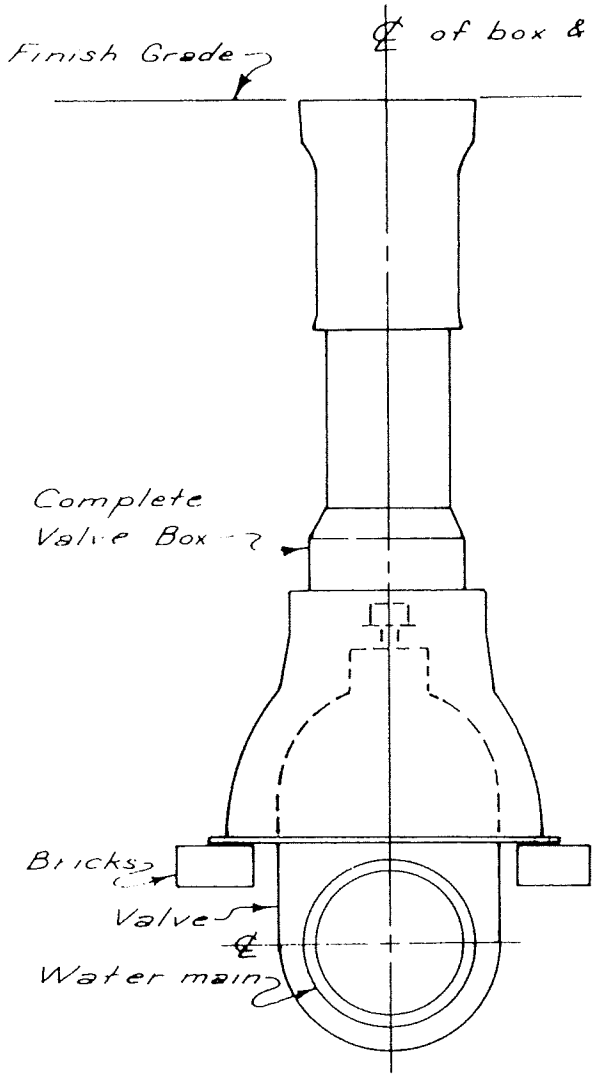


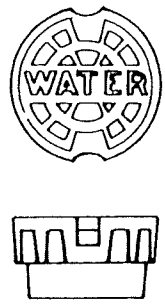


Drop Lid

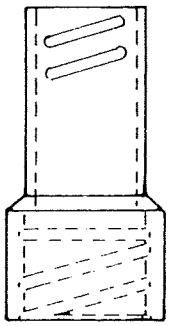

Extension

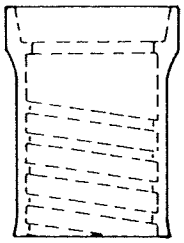

Top

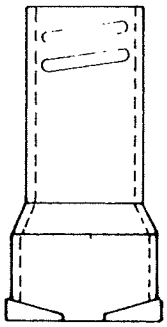

Bottom

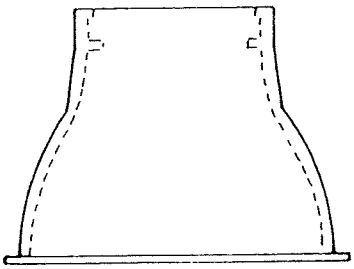

Standard Base

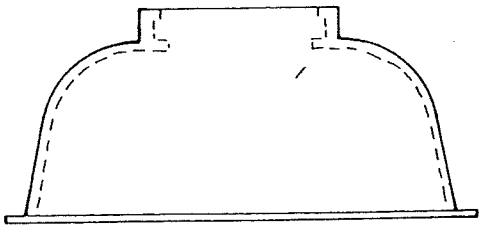

Wide Base

1. Valve box bases shall be sized and installed so that valve box can not transfer loads to valves. Place base on bricks.
2. Valve box shall be adjusted to finished grade to allow future adjustment up or down.
3. Valve boxes shall be cast iron, screw type with 5 1/4" shaft by Tyler Pipe or equal.

K.C.H.

| Commissioners of Thurmont | Revisions: Date / Note | Valve Boxes for Water Mains | Detail No 206 |
|---|---|---|---|
| | | | Date: 6-2-82 |

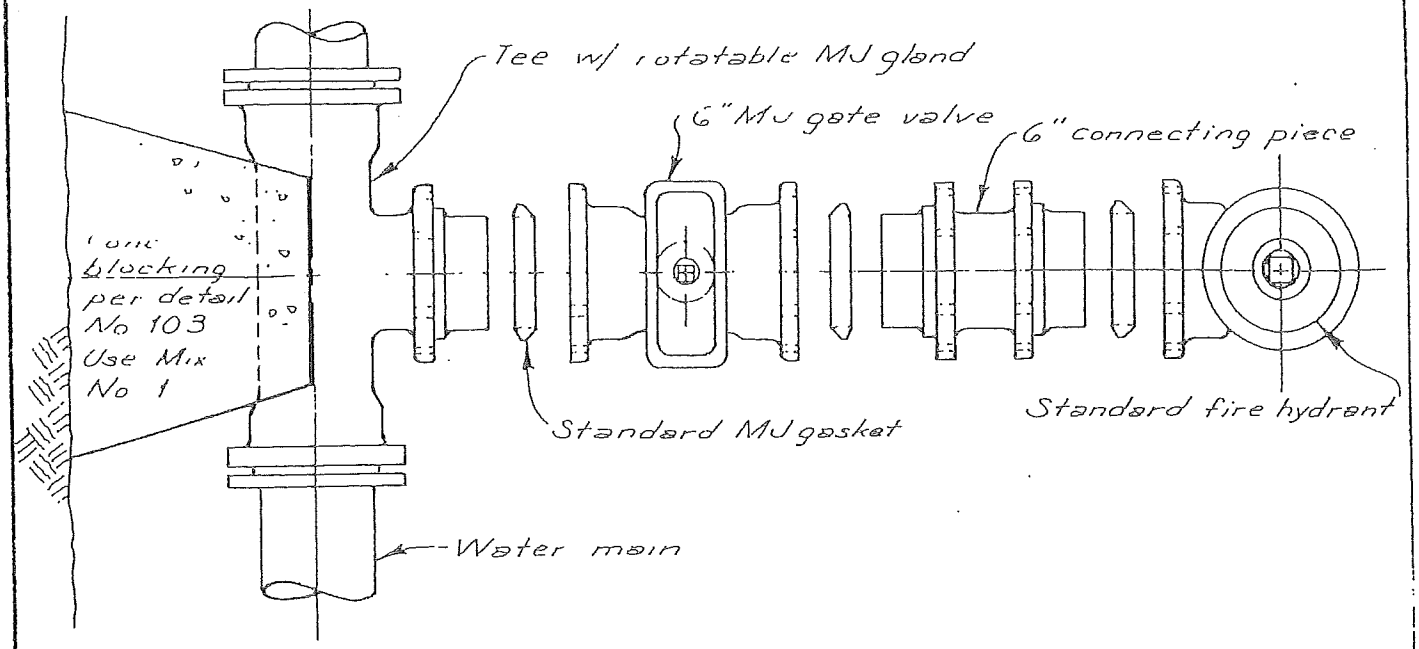


Mechanical joint valve and hydrant tees and connecting pieces shall be used for anchoring mechanical joint valves and hydrants to the pipe main. These hydrant fittings with integrally attached glands shall effectivelly restrain joint from separation. Joint connections shall be made with standard mechanical joint bolts and gaskets. Tie rods are not required. Glands shall rotate on tee branches and one end of connection pieces to facilitate vertical setting of valves and hydrants in sloping terrain. Hydrant tees and connecting pieces may be grey iron or ductile iron and shall meet ANSI A21 10 and A21.11

| Commissioners of Thurmont | Revisions<br>Date / Note | Alternate Method of Installing Fire Hydrants | Detail No<br>207<br>Date: 6-2-82 |
|---|---|---|---|

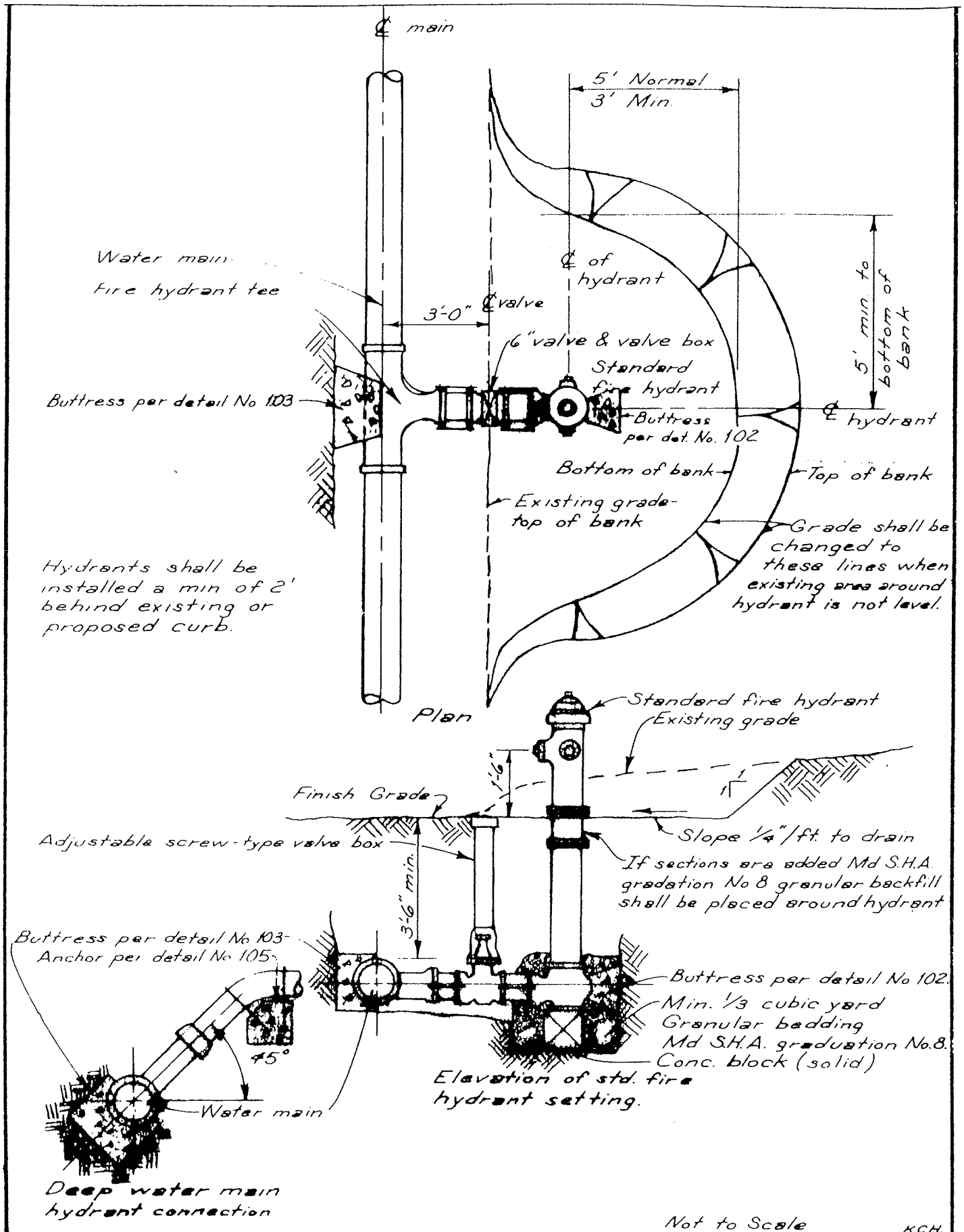


Not to Scale

K.C.H.

| Commissioners of Thurmont | Revisions Date / Note | Fire Hydrant Setting and Grading | Detail No. 208 |
|---|---|---|---|
| | | | Date: 6-2-82 |

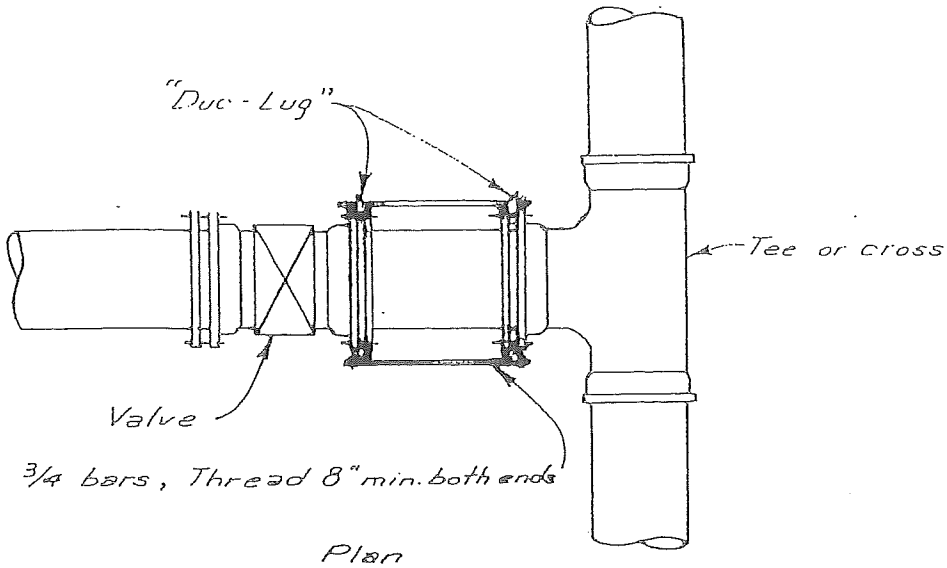


Plan

| Valve Size | No. of 3/4 ø bars required | Max Spigot Length |
|---|---|---|
| 3" | 2 | 27" |
| 4" | 2 | 27" |
| 6" | 2 | 27" |
| 8" | 2 | 27" |
| 10" | 4 | 27" |
| 12" | 6 | 27" |
| 16" | 8 | 36" |
| 20" | 12 | 36" |
| 24" | 16 | 36" |
| 30" | 20 | 36" |

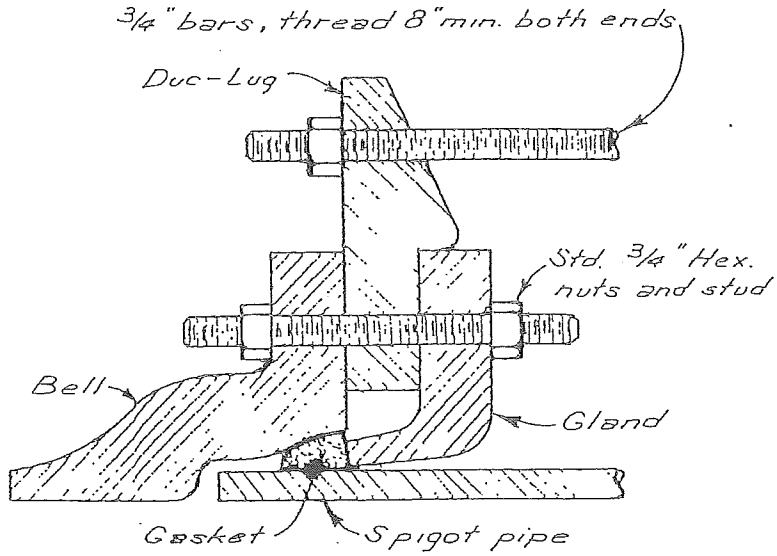


Cross Section of Lug Assembly

Mechanical joint fittings only shall be used.

All steel shall be coated with two coats of bituminous paint, conforming to MIL-P-23236 P, class 2.

If tapping sleeve & valve are used, omit strapping and spigot pipe.

Tie bolts by "Star" are an approved equal to "Duc-Lugs".

KCH

| Commissioners of Thurmont | Revisions: Date / Note | Method of Strapping Valve to Tee with "Duc-Lugs" | Detail No 209 |
|---|---|---|---|
| | | | Date: 6-2-82 |

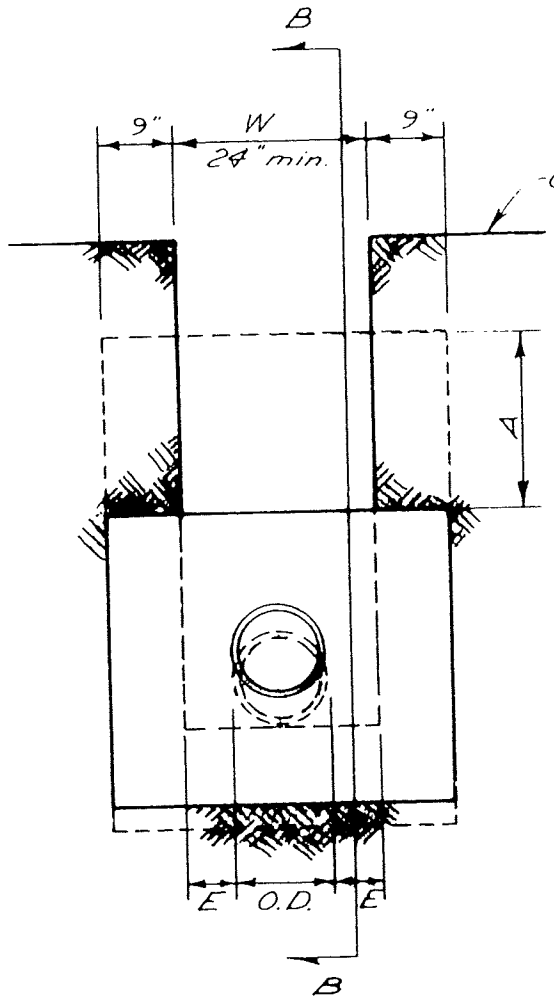


Section "A-A"

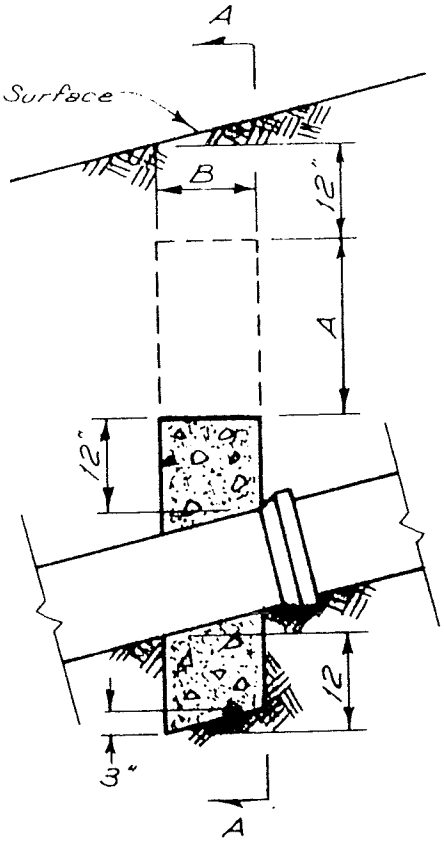


Section "B-B"

A - Extension of anchor to 12" below ground surface, when necessary to prevent washout of backfill by surface water.
B - 12" for pipes 10" or less, 18" for pipes 10" to 18" nominal dia.
W - O.D. + 2E

1. Provide no anchors on grades less than 20% unless noted.
2. Provide anchors 36' ctr. to ctr. on grades between 20% & 34%.
3. Provide anchors 24' ctr. to ctr. on grades between 34% & 50%.
4. Provide anchors 16' ctr. to ctr. on grades between 50% & 70%.
5. All anchors to be Md. S.H.A. mix no. 1 concrete, placed downgrade of bell, as shown above.

K.C.H.

| Commissioners of Thurmont | Revisions: Date / Note | Concrete Anchors for Pipe installed on Grades 20% or More | Detail No. 210 |
|---|---|---|---|
| | | | Date: 6-2-82 |

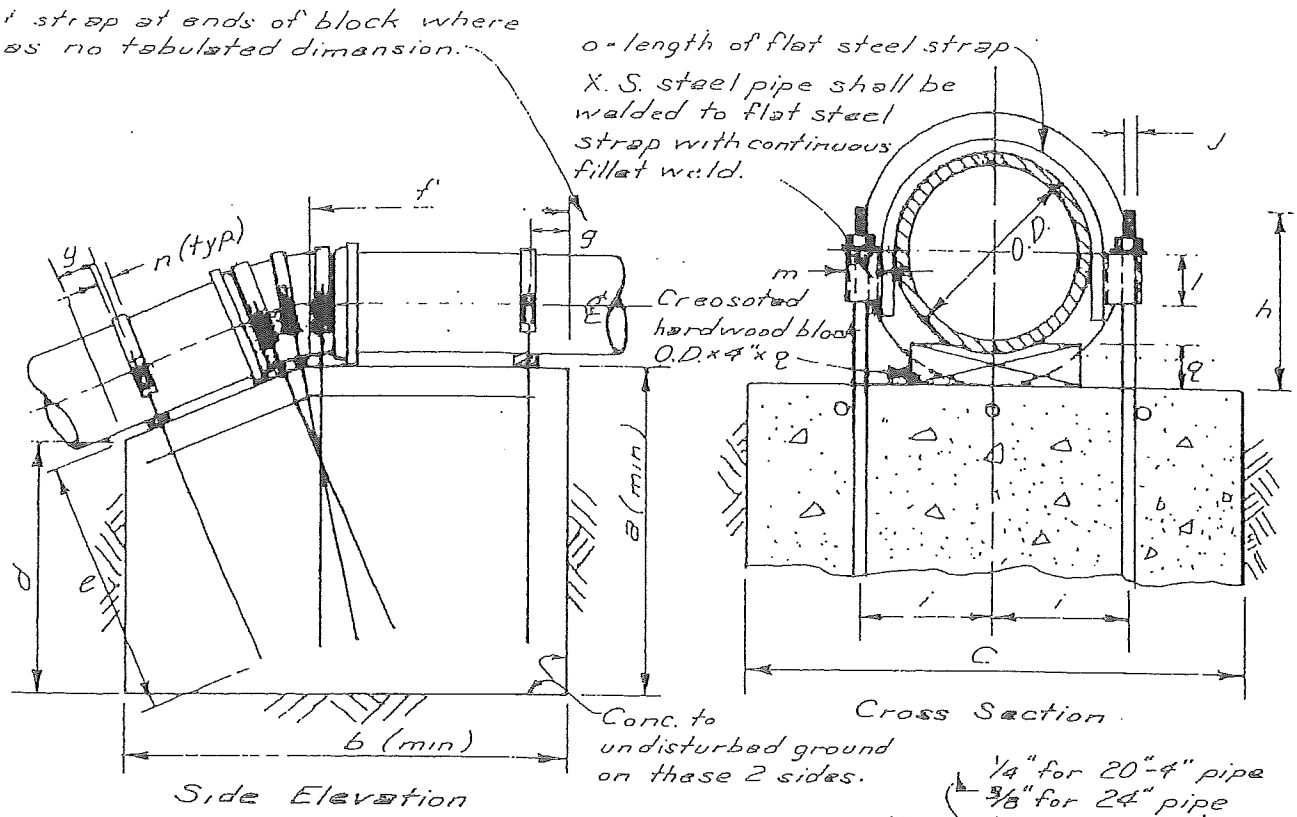


Concrete shall be Md S.H.A. mix No. 1.

Anchor bolts shall have 3" threaded length & std. 90° hook facing center of block, and shall be tied to rebar w/eq. ϕ.

All exposed steel to be painted with 2 coats of bituminous paint conforming to MIL-P-23236 P, class 2.

Bell to rest on screeded upper surfaces of block.

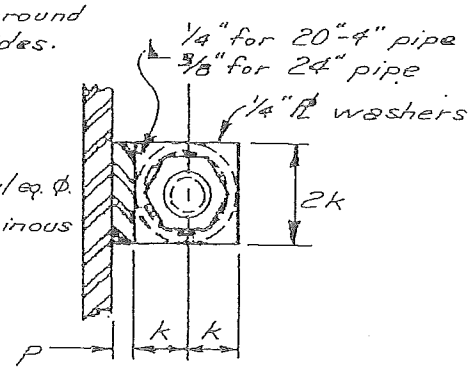


Strap Attachment

KCH

Dimensions for Vertical Bend Anchorages - In Inches

| Bend | 1/32 - 11 1/4° | | | | | | | | 1/16 - 22 1/2° | | | | | | | | 1/8 - 45° | | | | | | | |
|---|---|---|---|---|---|---|---|---|---|---|---|---|---|---|---|---|---|---|---|---|---|---|---|---|
| Size ϕ | 4 | 6 | 8 | 10 | 12 | 16 | 20 | 24 | 4 | 6 | 8 | 10 | 12 | 16 | 20 | 24 | 4 | 6 | 8 | 10 | 12 | 16 | 20 | 24 |
| a | 12 | 16 | 18 | 22 | 26 | 34 | 36 | 42 | 15 | 20 | 26 | 36 | 36 | 42 | 48 | 56 | 18 | 27 | 45 | 48 | 60 | 66 | 72 | 78 |
| b | 12 | 18 | 20 | 26 | 34 | 44 | 50 | 54 | 18 | 22 | 33 | 44 | 50 | 72 | 80 | 90 | 21 | 39 | 51 | 63 | 75 | 84 | 99 | 111 |
| c | 15 | 18 | 28 | 30 | 30 | 34 | 42 | 50 | 18 | 30 | 30 | 30 | 36 | 39 | 48 | 54 | 30 | 30 | 30 | 36 | 36 | 51 | 60 | 72 |
| d | 11 | 14 1/2 | 16 | 19 1/2 | 22 1/2 | 30 | 31 1/2 | 37 | 11 1/2 | 16 | 19 1/2 | 27 1/2 | 26 1/2 | 28 1/2 | 38 1/2 | 39 | 9 | 13 | 28 | 28 | 31 | 37 | 37 | 40 |
| e | 8 | 12 | 14 | 18 | 22 | 28 | 30 | 36 | 11 | 16 | 22 | 30 | 30 | 36 | 42 | 50 | 14 | 23 | 39 | 42 | 54 | 60 | 66 | 70 |
| f | 6 1/2 | 9 1/2 | 10 | 14 | 18 | 24 | 27 | 29 | 9 1/2 | 18 | 22 | 24 | 27 | 39 | 43 | 49 | 12 | 23 | 34 | 43 | 46 | 56 | 64 | 73 |
| g | - | - | - | - | - | 6 | 6 | 6 | | | - | - | 6 | 6 | 6 | 6 | - | - | - | - | 6 | 6 | 6 | 6 |
| h | 6 1/2 | 7 1/8 | 8 1/8 | 9 1/8 | 10 3/4 | 13 | 15 1/4 | 18 | 6 1/2 | 7 1/8 | 8 1/8 | 9 1/2 | 10 3/4 | 15 | 15 1/4 | 18 | 6 1/2 | 7 1/8 | 8 1/8 | 9 1/4 | 10 | 13 1/4 | 15 1/4 | 18 |
| i | 3 1/2 | 4 9/16 | 5 11/16 | 6 3/4 | 7 3/4 | 9 3/4 | 12 1/4 | 14 1/4 | 3 1/2 | 4 9/16 | 5 11/16 | 6 3/4 | 7 3/4 | 9 3/4 | 12 1/4 | 14 1/4 | 3 1/2 | 4 9/16 | 5 11/16 | 6 3/4 | 7 3/4 | 10 1/8 | 12 1/4 | 14 1/4 |
| j | 3/4 | 3/4 | 3/4 | 3/4 | 3/4 | 3/4 | 3/4 | 1 | 3/4 | 3/4 | 3/4 | 3/4 | 3/4 | 3/4 | 7/8 | 1 | 3/4 | 3/4 | 3/4 | 3/4 | 3/4 | 1 | 1 | 1 1/4 |
| k | 3/4 | 3/4 | 3/4 | 3/4 | 3/4 | 3/4 | 3/4 | 1 1/4 | 3/4 | 3/4 | 3/4 | 3/4 | 3/4 | 3/4 | 7/8 | 1 5/16 | 3/4 | 3/4 | 3/4 | 3/4 | 3/4 | 3/4 | 3/4 | 1 1/4 |
| l | 1 | 1 | 1 | 1 | 1 1/4 | 2 | 3 | 4 | 1 | 1 | 1 1/4 | 2 | 1 1/4 | 2 1/4 | 3 1/4 | 5 | 1 | 1 1/4 | 2 1/4 | 2 | 2 1/4 | 4 1/4 | 4 1/4 | 6 |
| m | 1 | 1 | 1 | 1 | 1 | 1 | 1 1/4 | 1 1/4 | 1 | 1 | 1 | 1 | 1 | 1 | 1 1/4 | 1 1/4 | 1 | 1 | 1 | 1 | 1 | 1 1/4 | 1 1/4 | 1 1/4 |
| n | 1 1/4 | 1 1/4 | 1 1/4 | 1 1/4 | 1 1/4 | 2 | 2 | 2 1/4 | 1 1/4 | 1 1/4 | 1 1/4 | 1 1/4 | 2 | 2 | 2 | 2 1/4 | 1 1/4 | 1 1/4 | 2 | 2 | 2 | 2 1/4 | 2 1/4 | 2 1/4 |
| o | 12 1/4 | 15 1/4 | 19 | 22 1/4 | 26 1/4 | 33 1/4 | 42 1/4 | 51 1/8 | 12 1/4 | 15 1/4 | 19 1/4 | 24 | 26 1/4 | 34 | 43 | 53 | 12 1/4 | 16 1/4 | 22 | 24 | 29 | 38 | 42 | 55 |
| p | 1/4 | 1/4 | 1/4 | 1/4 | 1/4 | 1/4 | 3/8 | 3/4 | 1/4 | 1/4 | 1/4 | 1/4 | 1/4 | 1/4 | 3/8 | 3/8 | 1/4 | 1/4 | 1/4 | 1/4 | 3/8 | 3/8 | 1/2 | 1/2 |
| q | 1 | 1 | 1 | 1 1/4 | 1 1/8 | 1 1/4 | 1 1/4 | 1 1/4 | 1 | 1 | 1 | 1 1/4 | 1 1/4 | 1 1/4 | 1 1/4 | 1 1/4 | 1 | 1 | 1 | 1 1/4 | 1 1/4 | 1 1/4 | 1 1/4 | 1 1/4 |

| Commissioners of Thurmont | Revisions | | Anchors for 11 1/4°, 22 1/2° & 45° Upper Vertical Bends | Detail No. 211 |
|---|---|---|---|---|
| | Date | Note | | Date: 6-2-82 |

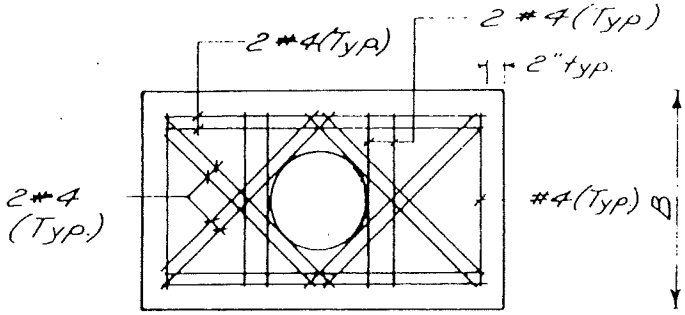


Front Elevation for 3" & 4" Pipes

Min. clr. shall be 1" from pipe to reinforcing steel.

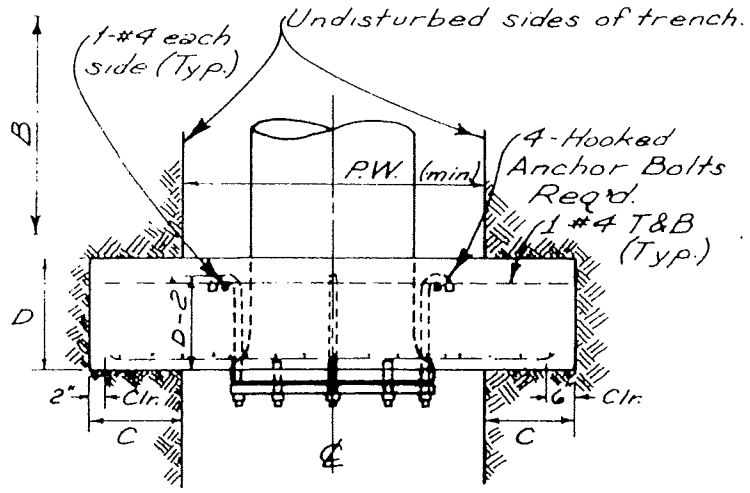


Complete trench in front of plug shall be backfilled and compacted per the General Cond and Std. Specs. prior to testing.

Plan for All Pipes

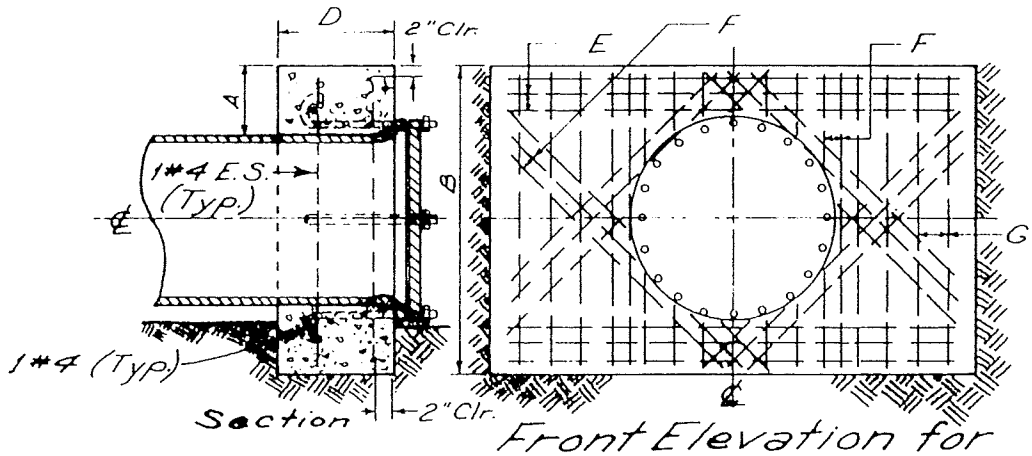


Front Elevation for 6" to 12" Pipes

| Anchor Dimensions | | | | | Steel - Size & Spacing | | |
|---|---|---|---|---|---|---|---|
| Pipe Size | A | B | C | D | E | F | G |
| 3" | 4" | 1'-0" | 6" | 12" | — | — | — |
| 4" | 4" | 1'-0" | 9" | 12" | — | — | — |
| 6" | 6" | 1'-6" | 1'-0" | 12" | 2-#4 | 2-#4 | #4@3" |
| 8" | 1'-0" | 2'-9" | 1'-0" | 1'-6" | 2-#4 | 2-#4 | #4@3" |
| 10" | 1'-0" | 3'-3" | 1'-3" | 1'-6" | 3-#4 | 2-#4 | #4@3" |
| 12" | 1'-0" | 3'-9" | 1'-6" | 1'-6" | 4-#4 | 2-#4 | #4@3" |

1. Conc. to have a 28-day compressive strength of 3,000 p.s.i. prior to testing.
2. Reinforcing Steel to be A.S.T.M. A-615 Grade 40 and/or Grade 60.
3. Anchor Bolts to have a minimum $F_y = 36,000$ psi.
4. If trench width exceeds P.W. by more than 25% anchor wall design must be verified for structural adequacy.
5. Pipe test pressure = 150 p.s.i.

K.C.H.

| Commissioners of Thurmont | Revisions: Date / Note | Anchors for Plugs | Detail No. 212 |
|---|---|---|---|
| | | | Date: 6-2-82 |

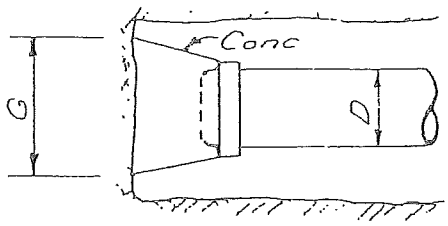


Plan

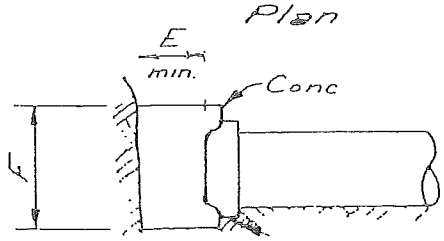


Section

Place polyethylene sheet between cap & conc

| Buttress for Caps | | | | | | | | | | |
|---|---|---|---|---|---|---|---|---|---|---|
| D | 3" | 4" | 6" | 8" | 10" | 12" | 16" | 20" | 24" | 30" |
| E | 7" | 7" | 6" | 8" | 8" | 10" | 1'-0" | 1'-4" | 1'-8" | 2'-0" |
| F | 14" | 14" | 1'-0" | 1'-4" | 1'-8" | 2'-0" | 2'-8" | 3'-3" | 4'-0" | 4'-9" |
| G | 12" | 12" | 1'-5" | 1'-11" | 2'-5" | 2'-10" | 3'-9" | 4'-9" | 5'-8" | 7'-6" |

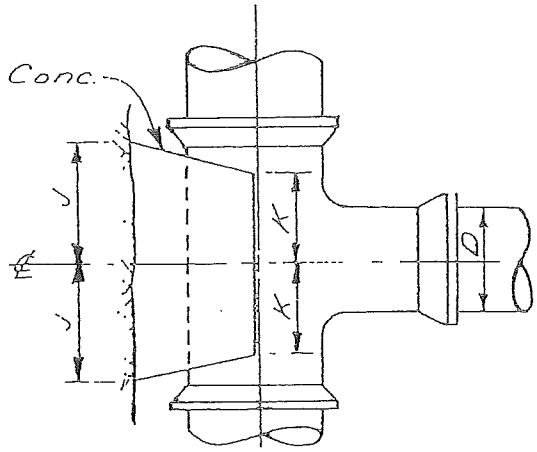


Plan

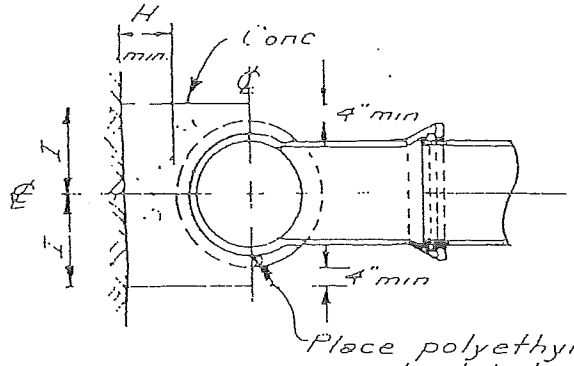


Section

Place polyethylene sheet between tee & conc.

| Buttress for Tees | | | | | | | | | | |
|---|---|---|---|---|---|---|---|---|---|---|
| D | 3" | 4" | 6" | 8" | 10" | 12" | 16" | 20" | 24" | 30" |
| H | 7" | 7" | 8" | 9" | 10" | 1'-0" | 1'-4" | 1'-8" | 2'-2" | 2'-8" |
| I | 7" | 7" | 10" | 1'-1" | 1'-4" | 1'-7" | 2'-2" | 2'-8" | 3'-2" | 3'-8" |
| J | 6" | 6" | 6" | 8" | 1'-1" | 1'-1" | 1'-5" | 1'-9" | 2'-1" | 2'-6" |
| K | 4" | 4" | 6" | 7" | 8" | 9" | 10" | 1'-2" | 1'-4" | 1'-6" |

1. All concrete shall be Mix No. 1.
2. Buttress dimensions shown are based upon soil bearing pressure of 3,000 p.s.f. and static water pressure of 150 p.s.i. Where pressure exceeds 150 psi or where soil bearing pressure is less than 3,000 p.s.f. special buttress design is required.
3. For caps on mains where rock has been excavated ahead of pipe laying, use Detail No 104

ACH

| Commissioners of Thurmont | Revisions: Date / Note | Buttresses for Caps and Tees on Water Mains | Detail No. 213 |
|---|---|---|---|
| | | | Date: 6-2-82 |

| Mechanical Joint Pipe | | | | |
|---|---|---|---|---|
| Nominal Pipe Size | Deflection -Inches | | Minimum Radius-Feet | |
| | 18 ft. length | 20 ft. length | 18 ft. length | 20 ft. length |
| 4 | 31 | 35 | 125 | 140 |
| 6 | 27 | 30 | 145 | 160 |
| 8 | 20 | 22 | 195 | 220 |
| 10 | 20 | 22 | 195 | 220 |
| 12 | 20 | 22 | 195 | 220 |
| 16 | 13.5 | 15 | 285 | 320 |
| 18 | 11 | 12 | 340 | 380 |
| 20 | 11 | 12 | 340 | 380 |
| 24 | 9 | 10 | 450 | 500 |

| Tyton Joint Pipe | | | | |
|---|---|---|---|---|
| Nominal Pipe Size | Deflection-Inches | | Minimum Radius-Feet | |
| | 18 ft. length | 20 ft. length | 18 ft. length | 20 ft. length |
| 4 | 19 | 21 | 205 | 230 |
| 6 | 19 | 21 | 205 | 230 |
| 8 | 19 | 21 | 205 | 230 |
| 10 | 19 | 21 | 205 | 230 |
| 12 | 19 | 21 | 205 | 230 |
| 16 | 11 | 12 | 340 | 380 |
| 18 | 11 | 12 | 340 | 380 |
| 20 | 11 | 12 | 340 | 380 |
| 24 | 11 | 12 | 340 | 380 |

The above charts are in accordance with AWWA C-600.

| Commissioners of Thurmont | Revisions | | Curvature of Water Mains | Detail No 214 |
|---|---|---|---|---|
| | Date | Note | | Date 6-2-82 |

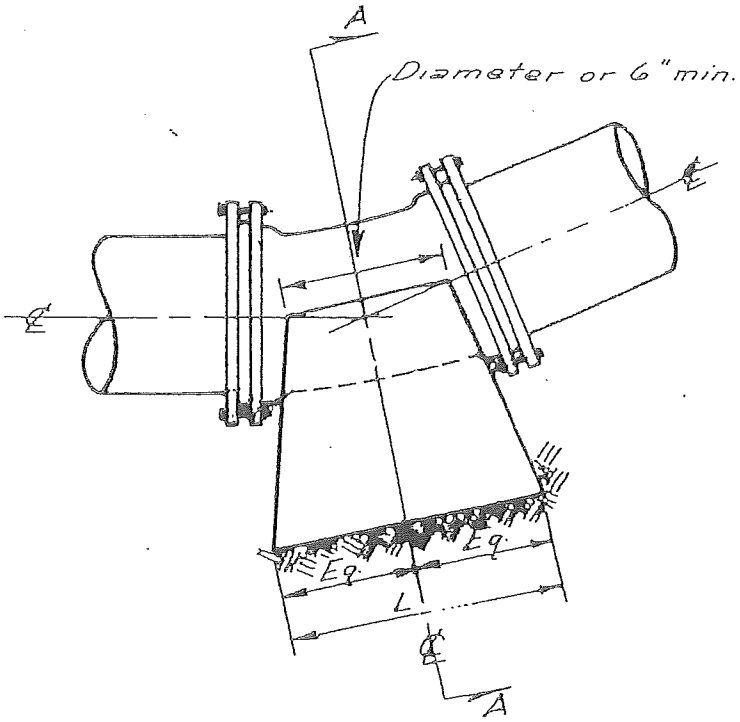


Elevation or Plan

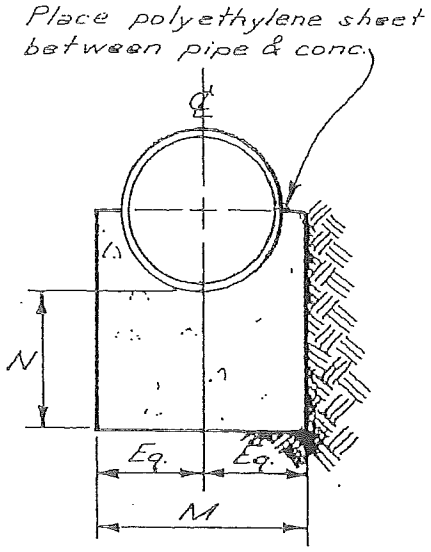


Section "A-A"

| Buttress dimensions | | | | | | | | | | | |
|---|---|---|---|---|---|---|---|---|---|---|---|
| Bend | | Size | | | | | | | | | |
| | | 3" | 4" | 6" | 8" | 10" | 12" | 16" | 20" | 24" | 30" |
| 11¼° | L | 6" | 6" | 6" | 8" | 8" | 8" | 1'-1" | 1'-5" | 1'-10" | 2'-8" |
| | M | 1'-0" | 1'-0" | 1'-2" | 1'-4" | 1'-6" | 2'-0" | 2'-4" | 2'-8" | 3'-0" | 3'-4" |
| 1/32 | N | 8" | 8" | 8" | 8" | 8" | 8" | 9" | 10" | 12" | 12" |
| 22½° | L | 6" | 8" | 10" | 11" | 1'-3" | 1'-4" | 2'-1" | 2'-9" | 3'-7" | 5'-3" |
| | M | 1'-0" | 1'-0" | 1'-2" | 1'-4" | 1'-6" | 2'-0" | 2'-4" | 2'-8" | 3'-0" | 3'-2" |
| 1/16 | N | 8" | 8" | 8" | 8" | 9" | 9" | 12" | 1'-2" | 1'-4" | 1'-6" |
| 45° | L | 10" | 1'-0" | 1'-2" | 1'-9" | 2'-5" | 2'-8" | 4'-0" | 5'-6" | 6'-0" | 8'-2" |
| | M | 1'-0 | 1'-0" | 1'-2" | 1'-4" | 1'-6" | 2'-0" | 2'-4" | 2'-8" | 3'-6" | 4'-0" |
| 1/8 | N | 8" | 8" | 8" | 8" | 12" | 1'-2" | 1'-6" | 2'-0" | 2'-6" | 3'-0" |
| 90° | L | 1'-0" | 1'-4" | 2'-0" | 2'-8" | 3'-4" | 3'-8" | 5'-6" | 6'-8" | 8'-0" | 9'-8" |
| | M | 9" | 10" | 12" | 1'-4" | 1'-9" | 2'-3" | 2'-8" | 3'-6" | 4'-0" | 4'-7" |
| 1/4 | N | 1'-8" | 1'-8" | 1'-8" | 1'-8" | 1'-8" | 1'-8" | 2'-0" | 2'-3" | 2'-9" | 3'-5" |

All concrete to be Md. S.H.A. mix No. 1.
All bearing surfaces shall be placed against undisturbed ground with a min. soil bearing pressure of 3,000 lbs. per s.f.

These buttresses shall be used for horizontal and vertical bends.

K.C.H.

| Commissioners of Thurmont | Revisions Date | Revisions Note | Buttresses for use at Horizontal and Vertical Bends | Detail No. 215 |
|---|---|---|---|---|
| | | | | Date: 6-2-82 |

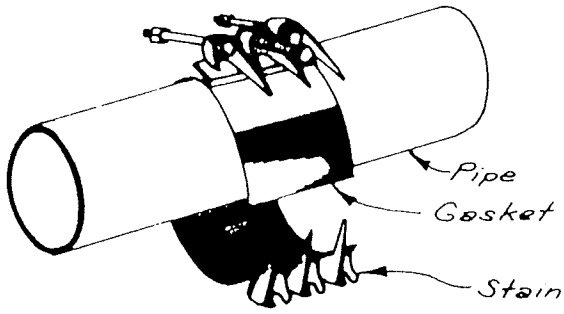


Clean pipe and mark for position where repair clamp is to be installed for centering over break
Lubricate pipe with soap solution.
Center clamp over damaged area.

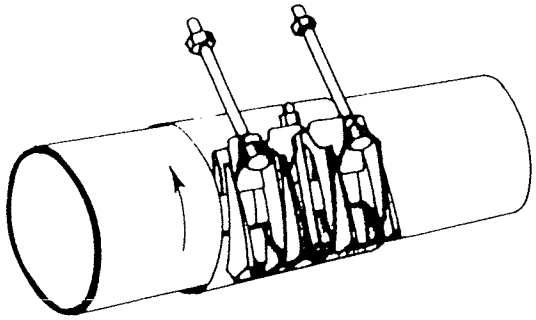

Tuck tapered gasket flap in place and mesh lug fingers. Then engage center bolt and tighten finger tight.

Rotate clamp on pipe in the direction indicated by arrow to seat gasket flap smoothly on the pipe.

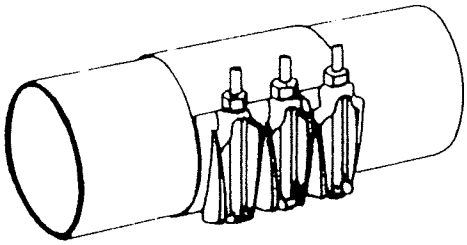

Engage remaining bolts and tighten all evenly with a torque wrench. All 5/8" bolts shall be torqued to 60-65 foot lb. and all 3/4" bolts shall be torqued to 80-85 foot lb.
On multi-band units, equalize gaps between bands.

Contractor shall provide Rockwell full circle repair clamp Nos. 226 or 228 or approved equal at no extra cost to Frederick County.

| Commissioners of Thurmont | Revisions: Date / Note | Installation of Full Circle Repair Clamp | Detail No 216 |
|---|---|---|---|
| | | | Date: 6-2-82 |

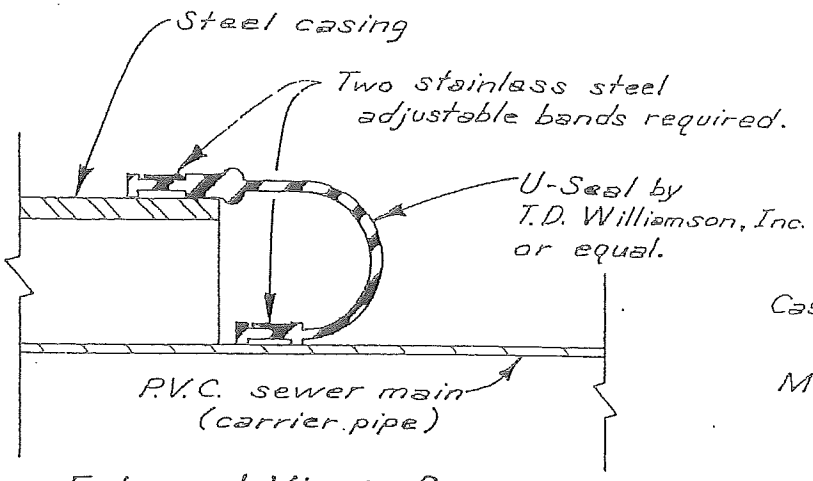


Enlarged View of End Seal Installation

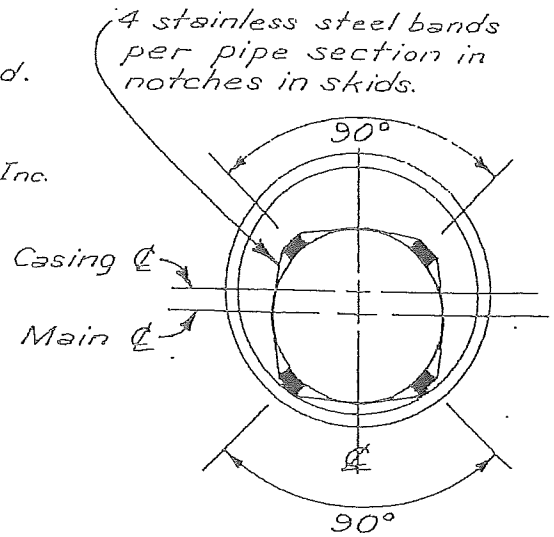


Section "A-A"

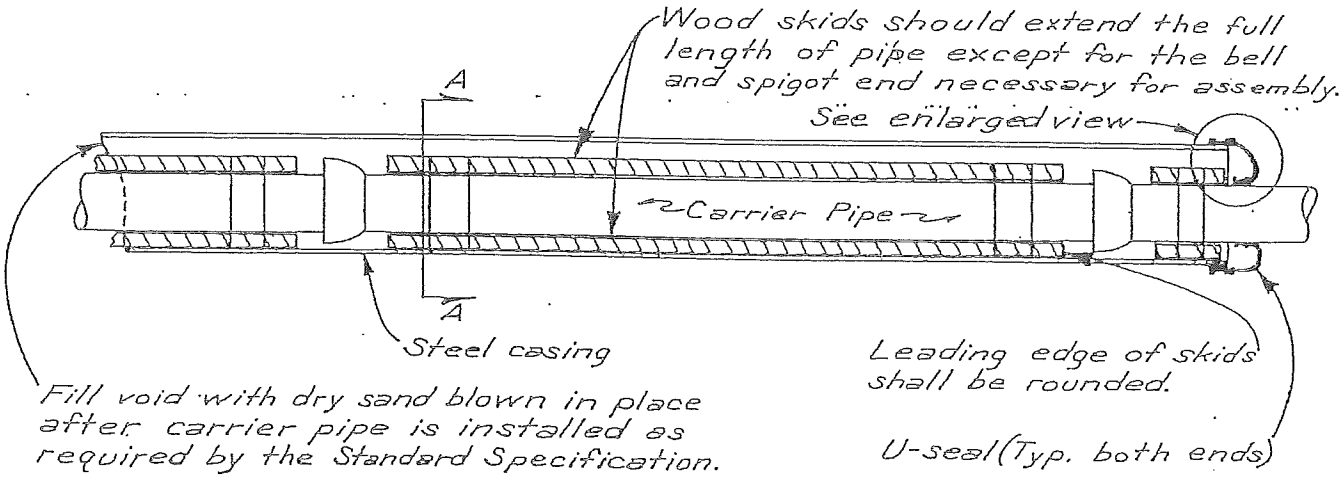


Elevation View

Nominal Diameters in Inches

| Main | Casing |
|---|---|
| 4 | 10 |
| 6 | 12 |
| 8 | 16 |
| 10 | 18 |
| 12 | 20 |
| 15 | 24 |
| 18 | 26 |
| 21 | 30 |
| 24 | 33 |
| 27 | 36 |

Casing shall conform to AWWA C-200.

P.V.C. carrier pipe shall conform to ASTM D 3034, SDR 35 & ASTM F679, SDR 35.

The four treated oak skids should be high enough to allow for clearance between the bell and casing bottom. Min. size of skids to be 2"x4" (nom.)

The inside surface of the casing and/or the skids shall be lubricated with drill mud or flaxsoap to facilitate the sliding of the carrier pipe.

Commissioners of Thurmont, Md.

| Revisions | |
|---|---|
| Date | Note |
| 3-83 | 1 Size |

Casing for P.V.C. Main under Highways and Railroads

Detail No. 217

Date:

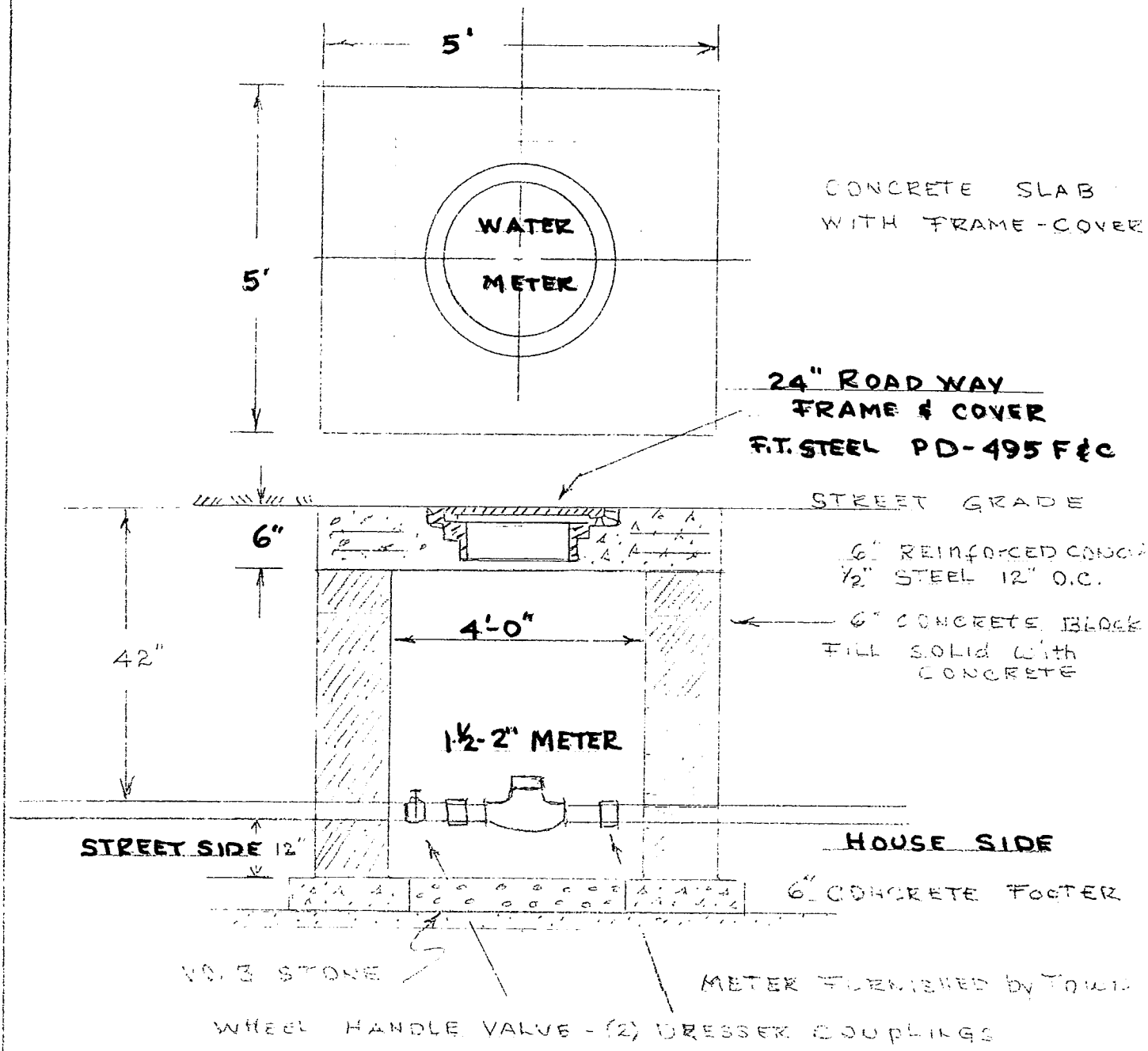


| | | |
|---|---|---|
| Commissioners of Thurmont, Md. | 1 1/2 - 2" WATER METER SETTING | DETAIL NO. 218 DATE 6-2-82 |

ESTIMATED COSTS FOR INSTALLATION OF FIRE FLOW DETECTOR

AND STANDARD WATER SUPPLY SERVICE BASED ON SIX INCH FIRE LINE

| | |
|---|---|
| 1 - 6" Model F.M. Detector meter . . . . . | $ 1,300. |
| 1 Set 6" cast iron flanges . . . . . | 100. |
| 1 Meter vault, complete with frame and cover inside dimensions - 5'3" x 6'0" height - 6'0", brick or reinforced concrete construction . . . . . | 2,000. |
| Installation of piping, valves, meter in vault . . . . . | 500. |
| | $ 3,900. |

ESTIMATED COSTS FOR INSTALLATION OF 6" FIRE FLOW METER

AND STANDARD WATER SUPPLY SERVICE, - - ALL WATER METERED

| | |
|---|---|
| 1 - 6" Model FM-CT Fire meter . . . . . | $ 5,200. |
| 1 Set 6" cast iron flanges . . . . . | 100. |
| 1 meter vault, 12'0" x 7'0" . . . . . | 5,544. |
| Installation of piping, valves, meter in vault . . . . . | 750. |
| | $11,594. |

| Size | A | B | C | Wall Thickness |
|---|---|---|---|---|
| 4" | 4'-3" | 5'-6" | 3'-2" | * 8" |
| 6" | 5'-3" | 6'-0" | 2'-5" | ∓12" |
| 8" | 5'-11" | 6'-11" | 2'-2" | ∓12" |
| 10" | 7'-2" | 8'-6" | 2'-4" | ∓12" |

△ Walls Shall Be Brick, Plain MSHA Mix No. 2 Conc., Or Reinforced Concrete.

Wall May Be 8" Reinforced Conc.

Increase To 12" For Depth Over 7'.

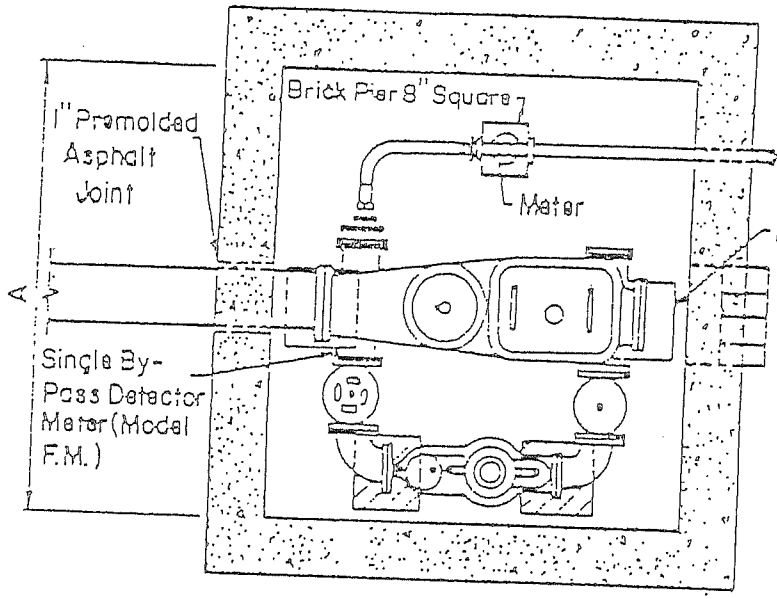


NOTES:

1. Concrete And Reinforcing Shall Conform To Frederick City Standard Specifications
2. Place 1/2" Premoulded Bituminous Joint Filler Between Concrete And Meter Frame.

For 4" Service Use 18" Meter Frame & Cover
For 6" Service Use 24" Meter Frame & Cover
For 8" Service Use 30" Meter Frame & Cover

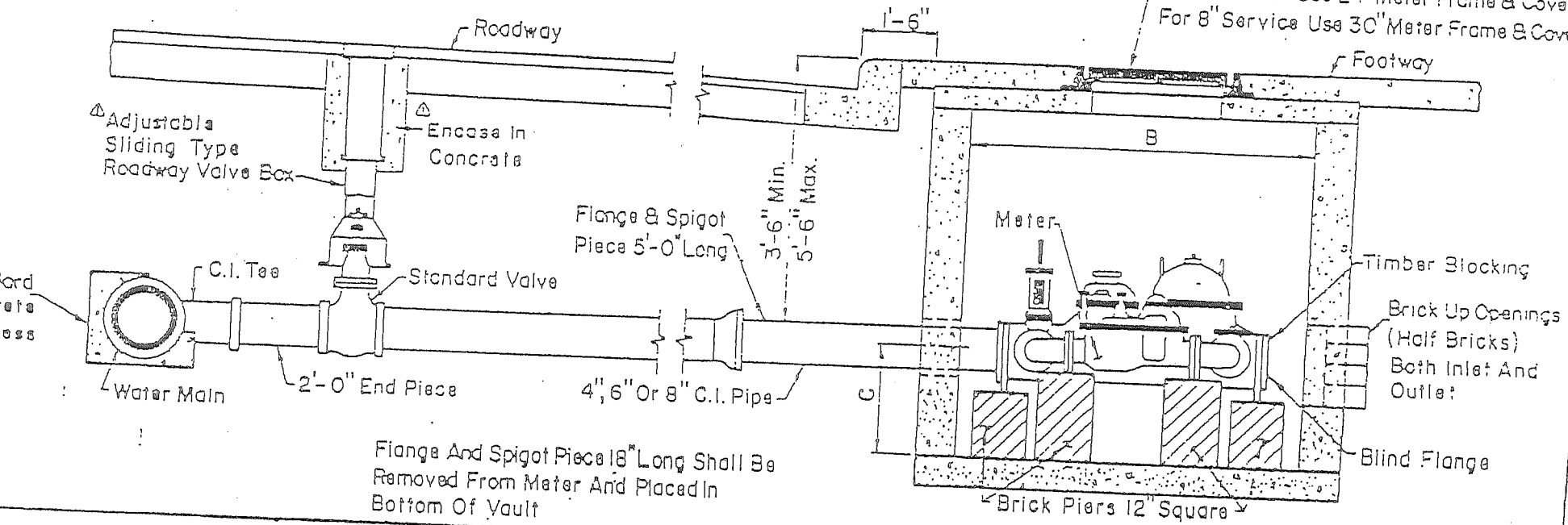


Flange And Spigot Piece 18" Long Shall Be Removed From Meter And Placed In Bottom Of Vault

THE COMMISSIONERS OF THURMONT, MD.

STANDARD INSTALLATION 6", 8" & 10" WATER SUPPLY SERVICE 6", 8" & 10" COMBINED SERVICE

Detail No. 219

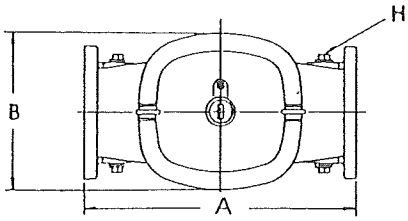


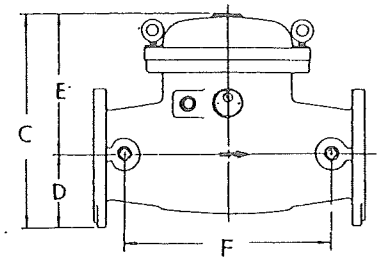


This valve is the same used for the Hersey EDCII Detector Check. Bypass taps on both sides are plugged.

**CHECK VALVE WEIGHTS & DIMENSIONS**

| Size | A | B | C | D | E | F | H | Approx Net Wt. | Approx Gross Wt. |
|---|---|---|---|---|---|---|---|---|---|
| 4" | 16-1/2 | 10-5/16 | 13-1/2 | 5 | 8-1/2 | 12-1/2 | 1 | 135 | 160 |
| 6" | 22-1/2 | 12-1/4 | 17-3/4 | 6 | 11-3/4 | 17 | 1-1/2 | 270 | 300 |
| 8" | 26-1/2 | 15-3/4 | 22-3/8 | 7-1/2 | 14-7/8 | 21 | 2 | 460 | 540 |
| 10" | 36 | 18-1/2 | 27 | 8-5/8 | 18 | 28 | 2 | 750 | 775 |

## FLOW CURVES

4" and 6"

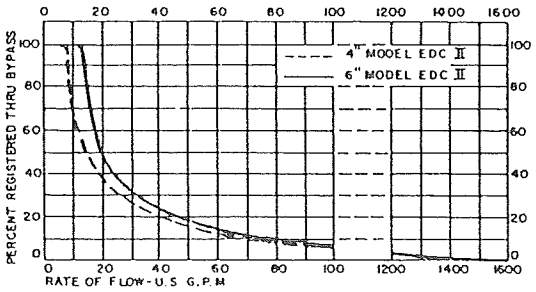


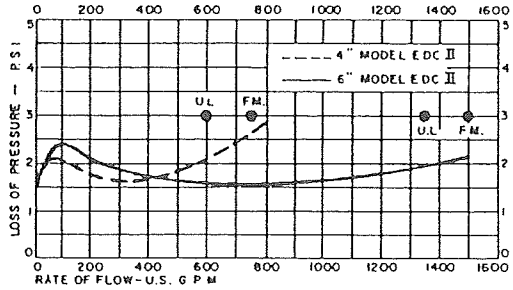


8" and 10"

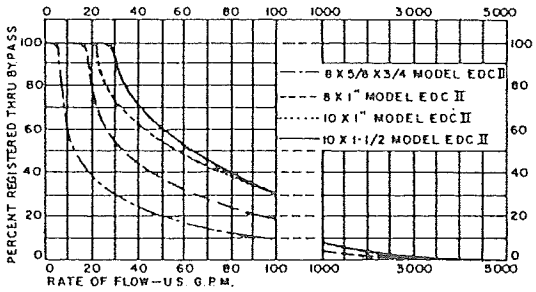


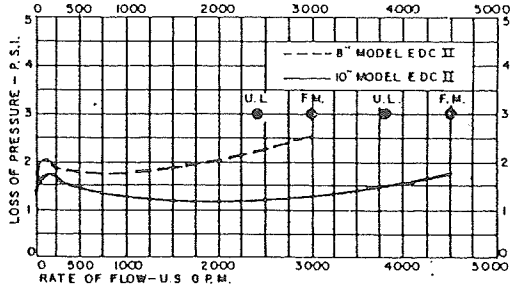


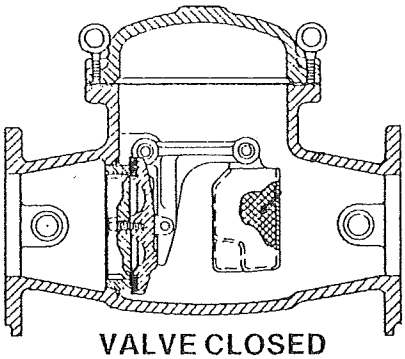

VALVE CLOSED

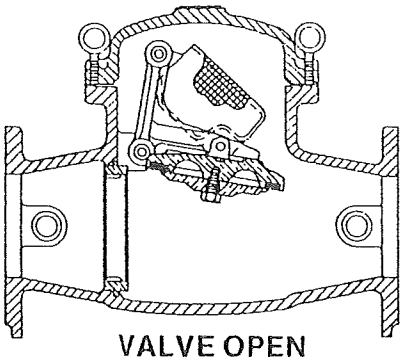

VALVE OPEN


LE FFICES
UTHEAST - 2131 Kingston Court, S.E., Suite 102, Marietta, GA 30067 (404) 952-4424
W ENGLAND - 250 Elm St., Dedham, MA 02026-9115 (617) 326-9400
RTHEAST - 320 Braen Ave., Wyckoff, NJ 07481 (201) 445-0373
DWEST - 1025 Criss Circle, Elk Grove Village, IL 60007 (312) 439-7700
STERN - 7240 East Slauson Ave., Los Angeles, CA 90040 (213) 722-6870

Hersey PRODUCTS INC.
Water Meter & Controls Group
250 Elm Street, Dedham, MA
02026-9115 U.S.A.

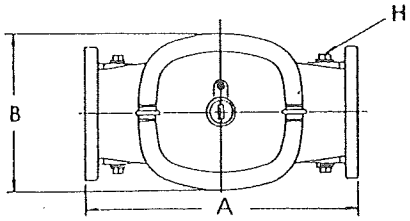


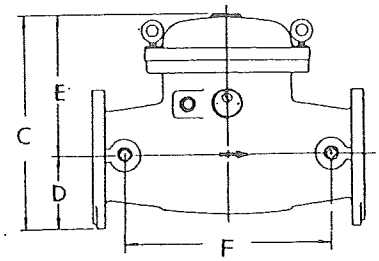


This valve is the same used for the Hersey EDCII Detector Check. Bypass taps on both sides are plugged.

## CHECK VALVE WEIGHTS & DIMENSIONS

| Size | A | B | C | D | E | F | H | Approx Net Wt. | Approx Gross Wt. |
|---|---|---|---|---|---|---|---|---|---|
| 4" | 16-1/2 | 10-5/16 | 13-1/2 | 5 | 8-1/2 | 12-1/2 | 1 | 135 | 160 |
| 6" | 22-1/2 | 12-1/4 | 17-3/4 | 6 | 11-3/4 | 17 | 1-1/2 | 270 | 300 |
| 8" | 26-1/2 | 15-3/4 | 22-3/8 | 7-1/2 | 14-7/8 | 21 | 2 | 460 | 540 |
| 10" | 36 | 18-1/2 | 27 | 8-5/8 | 18 | 28 | 2 | 750 | 775 |

## FLOW CURVES

4" and 6"

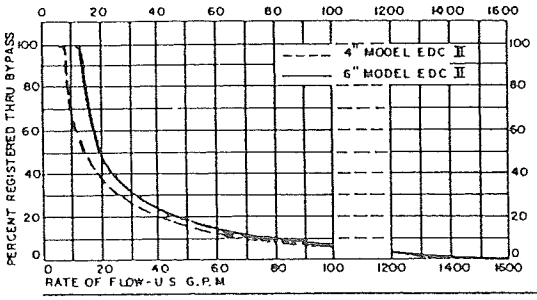


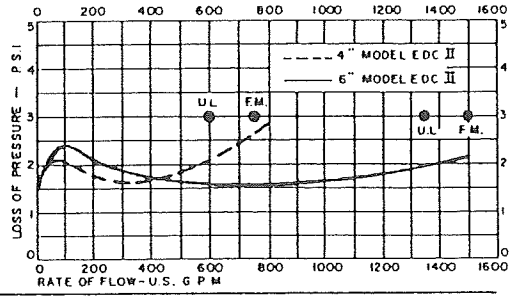


8" and 10"

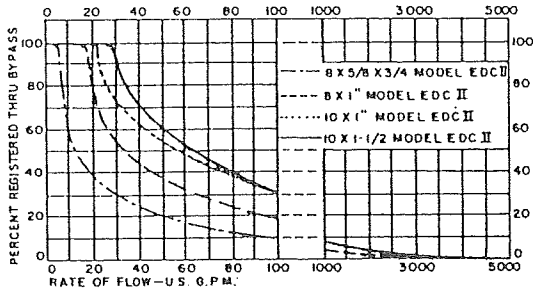


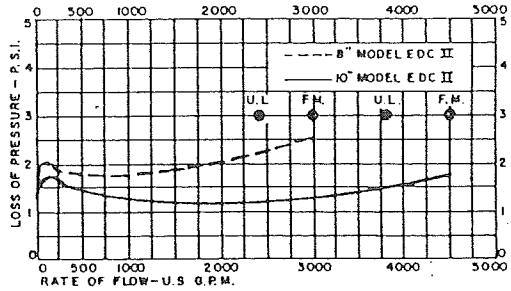


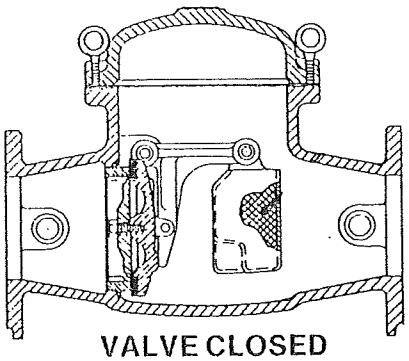

VALVE CLOSED

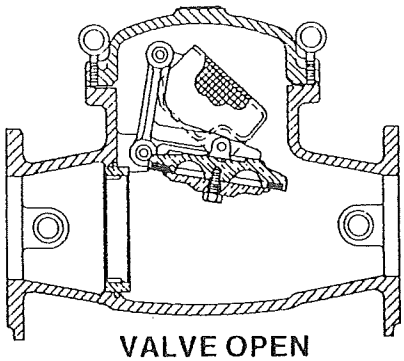

VALVE OPEN


ALES OFFICES

OUTHEAST – 2131 Kingston Court, S.E., Suite 102, Marietta, GA 30067 (404) 952-4424
EW ENGLAND – 250 Elm St., Dedham, MA 02026-9115 (617) 326-9400
ORTHEAST – 320 Braen Ave., Wyckoff, NJ 07481 (201) 445-0373
IDWEST – 1025 Criss Circle, Elk Grove Village, IL 60007 (312) 439-7700
ESTERN – 7240 East Slauson Ave., Los Angeles, CA 90040 (213) 722-6870


Hersey PRODUCTS INC.


Water Meter & Controls Group
250 Elm Street, Dedham, MA
02026-9115 U.S.A.
(617) 326-9400 Telex 92-4352



Copyright © 1986 Hersey Products Inc., Dedham, Massachusetts 02026, U.S.A.



Printed in U.S.A. 5M 9/86 TD

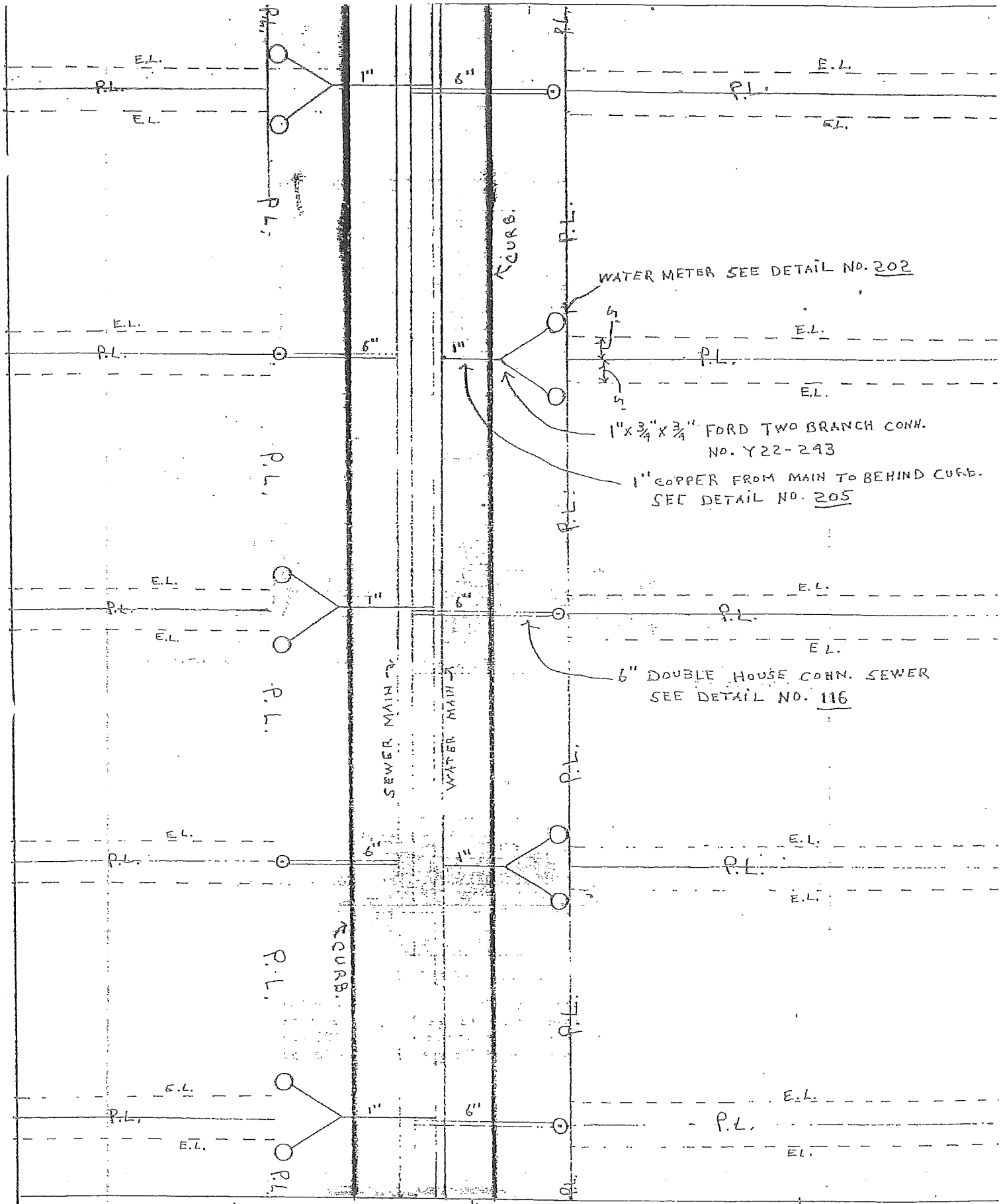


| | | | |
|---|---|---|---|
| COMMISSIONERS OF THURMONT, MD. | SYMBOLS<br>E.L.=Easement line<br>P.L.=Property line<br>⊙=6" sewer cleanout<br>○=water meter vault | DOUBLE WATER HOUSE CONNECTION & DOUBLE SEWER HOUSE CONNECTION LOCATIONS | DETAIL NO. 220<br>DATE: April 5,198 |

# STANDARD CLASS "E" GRATE AND FRAME

To be used for
- Standard Class "E" Inlet
- Standard Class "E" Combination Inlet
- Standard Class "H" Combination Inlet

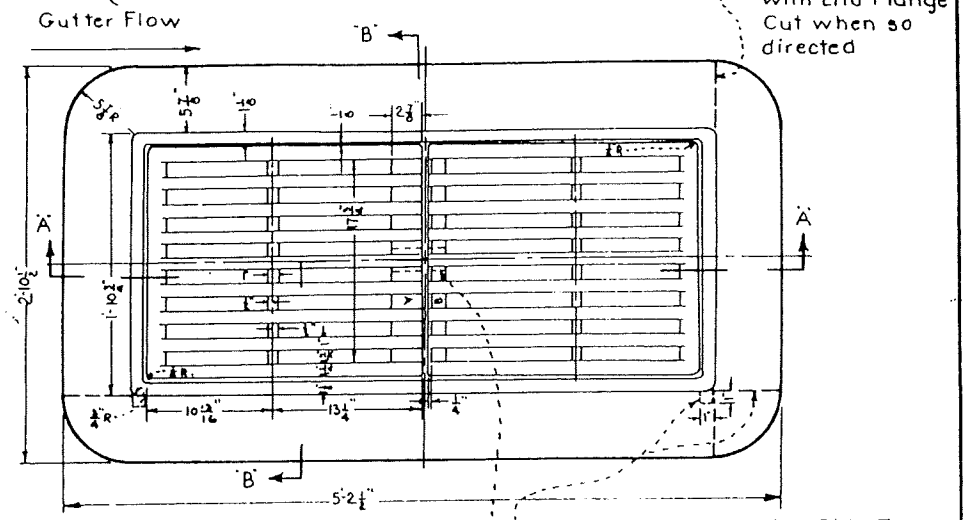


PLAN

Frame to be cast with Side Flange Cut & 1" Lugs at Each End for Class "E" Combination Inlet & Class "H" Combination Inlet.

2" Wide x ¼" High Fitting Lug on Frame

Grates slotted for exact fit

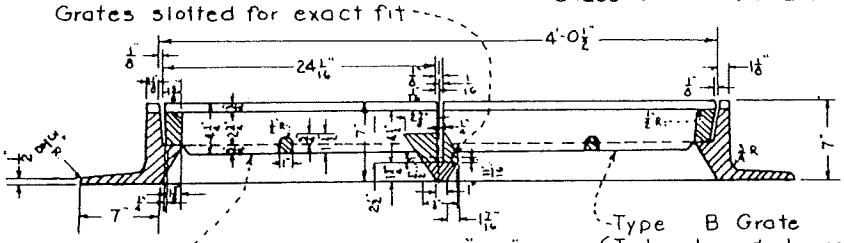


Type A Grate (To be placed upstream)

SECTION "A-A"

Type B Grate (To be placed downstream)

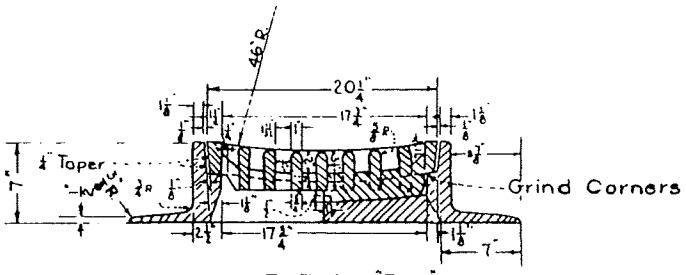


SECTION "B-B"

Approx. Weights

| | | |
|---|---|---|
| Grates, | Each | 216 lbs. |
| Frame | Full Flange | 668 lbs. |
| Frame | Side Flange Cut | 592 lbs. |
| Frame | End Flange Cut | 629 lbs |

Commissioners of Thurmont, Md.

STORM SEWER FRAME AND GRATE TYPE "E"

DETAIL NO. 300

DATE: 6-2-82

Note:
For undepressed inlets, use normal pavement slope. For depressed inlets, see S.R.C. Stnd. Plate No IL-20

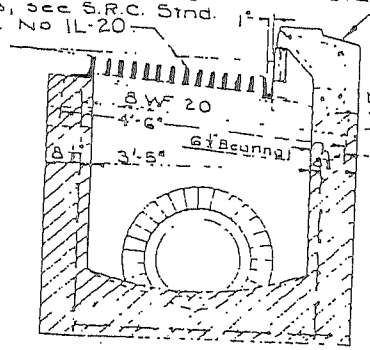


SECTION "B-B"

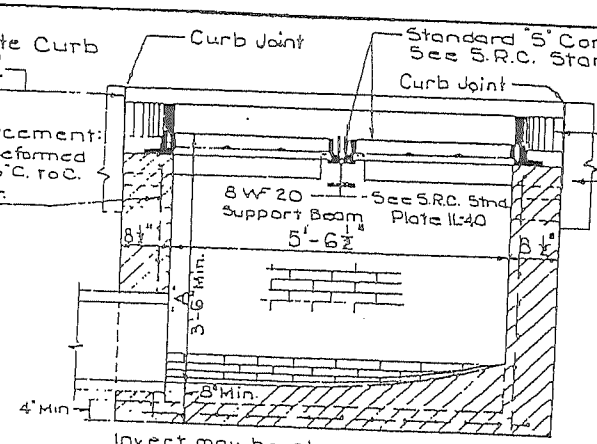


Invert may be plain concrete or 4" brick laid on edge Invert to slope down toward outlet at the rate of two (2) inches per foot, or as directed.

SECTION "A-A"

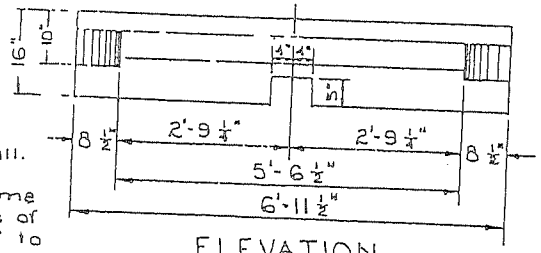


ELEVATION
PRECAST CURB

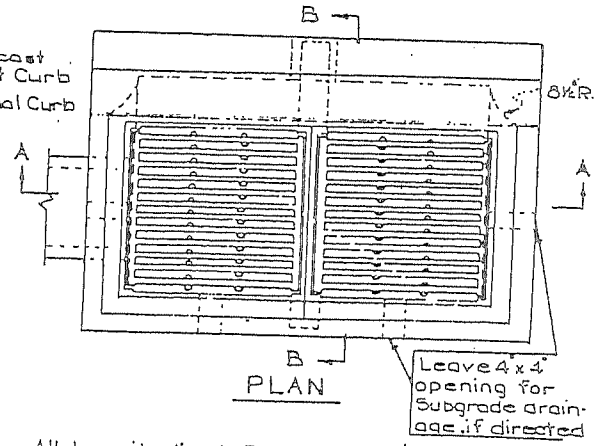


PLAN

GENERAL NOTES.
Inlet may be constructed of reinforced concrete or brick Size, type & direction of inlet connection will vary to suit conditions. Top 4" of walls may be brick masonry Addional brick may be used to bring the grate to grade if required. See latest S.R.C. specifications for inlets Reinforcement required on outside, as well as on inside, of walls below 7'-0" when "A" is greater than 7'-0". Spacing, same as for inside of wall. Place ¼" expansion material of same type approved for pavement between the frame and abutting rigid Pavement, & between ends of inlet curb & Normal Curb "Brick for Masonry" to comply with the latest SRC specifications.

All Longitudinal Bars - 6'-9½" long.
½"ϕ Corr. Anchor Bars, 24" C.C.-4 Required.
Beginning 7½" from angle End.
Fasten to Angle with ¼" fillet weld all around before galvanizing.

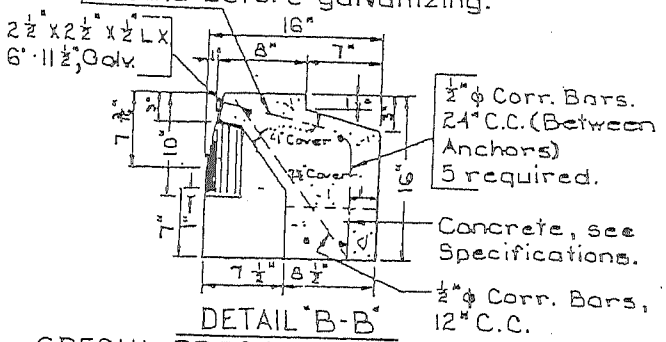


DETAIL "B-B"
SPECIAL PRECAST CURB DETAIL

STANDARD CLASS "S" COMBINATION INLET
(DOUBLE GRATE-TANDEM)

STORM SEWER
INLET CLASS "S"
Double Grate T

301

...issioners
of
Thurmont, Md.

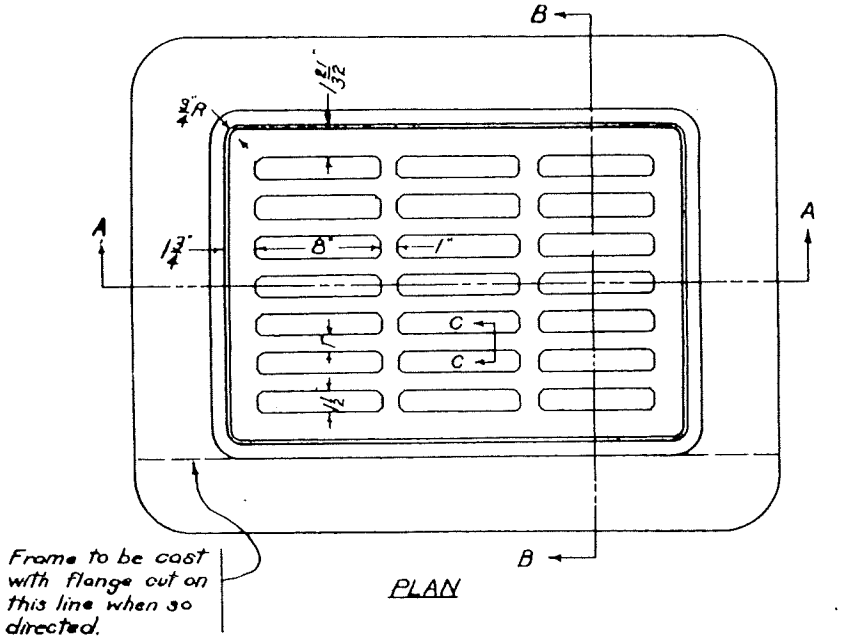


PLAN

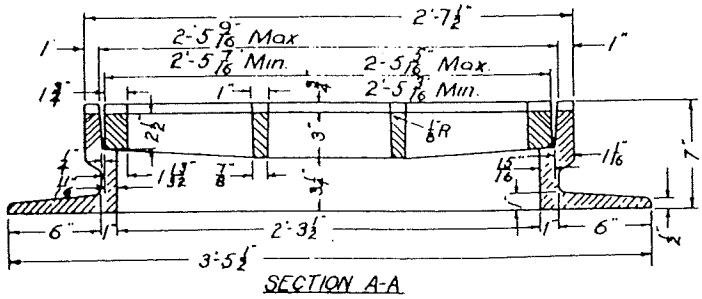


SECTION A-A

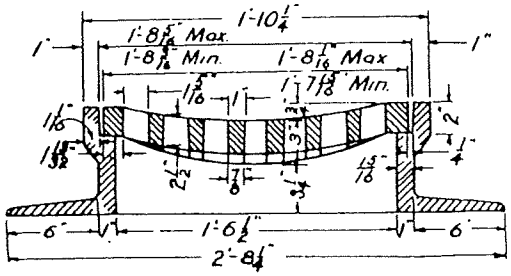


SECTION B-B

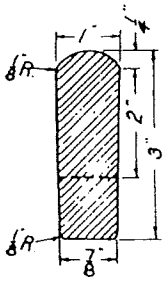

SECTION C-C

AVERAGE WEIGHTS

C.I. Frame - Full ——— 360 lbs.
C.I. Frame - Cut ——— 339 lbs.
C.I. Grate - Approx ——— 161 lbs.

## STANDARD CLASS "D" GRATE AND FRAME

Commissioners of Thurmont, Md.

STORM SEWER GRATE AND FRAME TYPE "D"

DETAIL NO. 302

DATE: 6-2-82

Note:
For undepressed inlets, use normal pavement slope. For depressed inlets, see S.R.C. Std Plate No. IL-20.

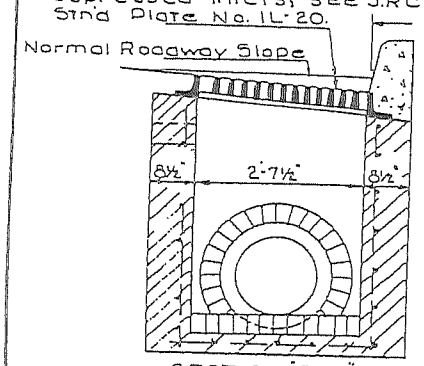


SECTION "B-B"

Invert may be plain concrete or 4" brick laid on edge. Invert to slope down toward outlet at the rate of two(2) inches per foot, or as directed.

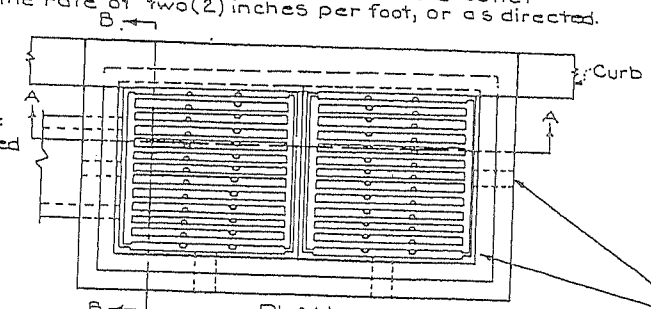


PLAN

Standard Class "S" Cast Iron Frame & Grates. See S.R.C. Standard Plate No. IL-40

Leave 4x4" opening for Subgrade drainage, if directed.

NOTE:
STANDARD CLASS "S" INLET (DOUBLE GRATE TANDEM) MAY BE USED WITH ONE END ADJACENT TO CURB. FRAME WILL BE LAID ON NORMAL SLOPE OF ROADWAY UNLESS NOTED OTHERWISE.
ALL WALL AND FRAME & GRATE DIMENSIONS SAME AS WHEN SIDE IS ADJACENT TO CURB AS SHOWN ON LEFT.
INLET MAY BE USED IN LOW SPOTS WHICH ARE NOT ADJACENT TO CURB.

GENERAL NOTES:
Inlet may be constructed of reinforced concrete or brick. Size, type & direction of inlet connection will vary to suit conditions.

Top 4" of walls may be brick masonry. Additional brick may be used to bring the grate to grade if required. See latest S.R.C. specifications for inlets.

Reinforcement required on outside, as well as on inside, of walls below 7'-0" when "A" is greater than 7'-0". Spacing, same as for inside of wall.

Place 1/2" expansion material of same type approved for pavement between the frame and abutting rigid pavement, & between ends of inlet curb & Normal Curb. Slope face of curb to meet inside edge of frame as shown in Section "B-B"

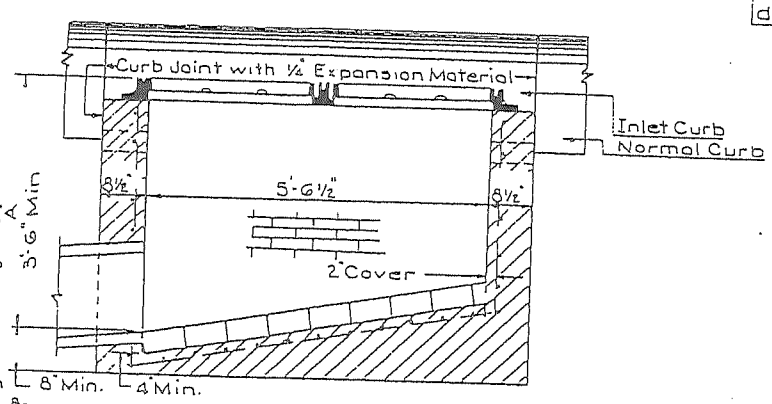


SECTION "A-A"

# STANDARD CLASS "S" INLET
## (DOUBLE GRATE - TANDEM)

DETAIL NO. 3C2

STORM SEWER
INLET CLASS "S"

Commissioners of Thurmont, Md.

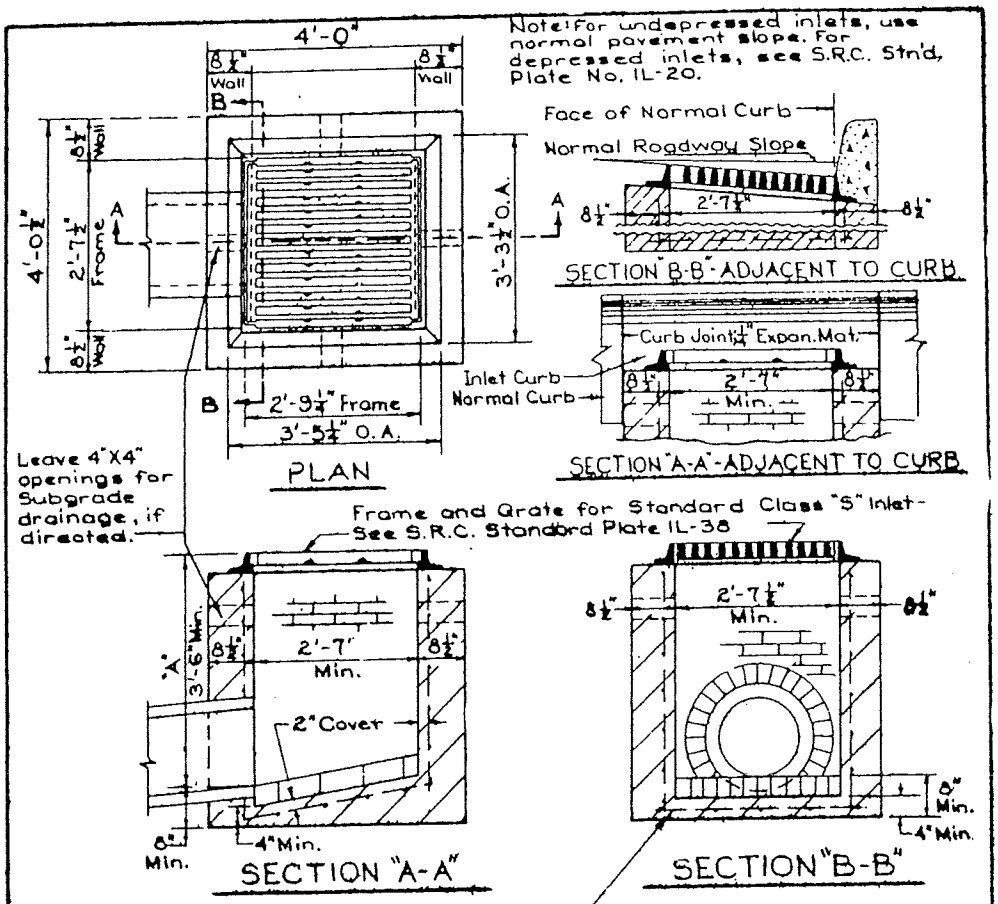


GENERAL NOTES:

Inlet may be constructed of Brick or reinforced Concrete. See latest S.R.C Specifications for Inlets.

Top 4" of walls may be brick masonry. Additional brick may be used to bring the grate to grade, if required.

Reinforcement required on outside, as well as on inside, of walls below 3'-0" when "A" is greater than 7'-0". Spacing, same as for inside of wall.

Place 1/4" expansion material of same type approved for pavement between the frame and abutting rigid pavement, and between ends of inlet curb and normal curb.

Size, type and direction of inlet connection will vary to suit conditions.

When inlet is used adjacent to curb, slope curb face to meet inside edge of frame, as shown in Section "B-B"-ADJACENT TO CURB.

"Brick for Masonry", to comply with the latest S.R.C. Specifications.

# STANDARD CLASS "S" INLET (SINGLE GRATE)

Commissioners of Thurmont, Md.

STORM SEWER

INLET CLASS "S"

SINGLE GRATE

DETAIL NO. 304

DATE: 6-2-82

THURMONT STANDARD
CURB AND GUTTER

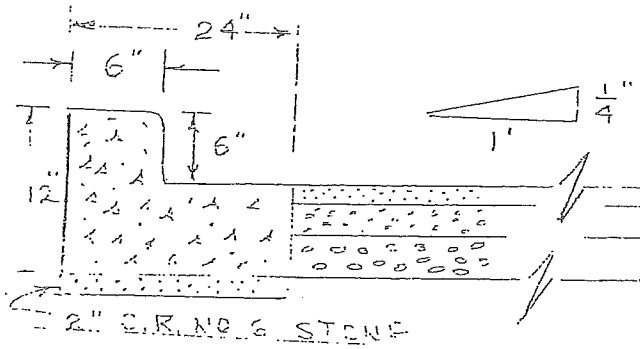


COMPACTED SUB-GRADE

STREET SHALL HAVE A FINISHED ℄ GRADE OF 1/4" PER FOOT OF FALL FROM ℄ OF ROAD TO THE TOP EDGE OF GUTTER

1" ST. BITUMINOUS CONCRETE

2" SN-BITUMINOUS CONCRETE

2"-BI-BITUMINOUS CONCRETE

— NOTE —

IF STREET IS CONSTRUCTED OVER UTILITY DITCHES APPLY 1" ST 1 YEAR LATER

| | | |
|---|---|---|
| missioners of Thurmont | INSTALLATION CURB & GUTTER AND PAVED STREETS | DETAIL No. 400 |

"TEMPORARY" REPAIR OVER DITCH

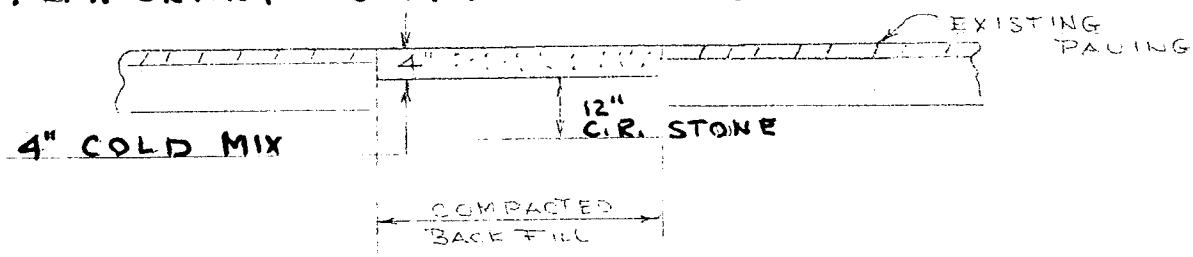


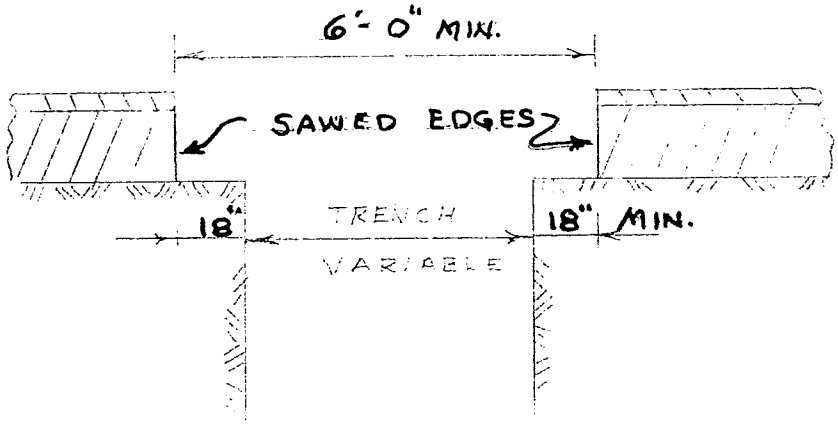


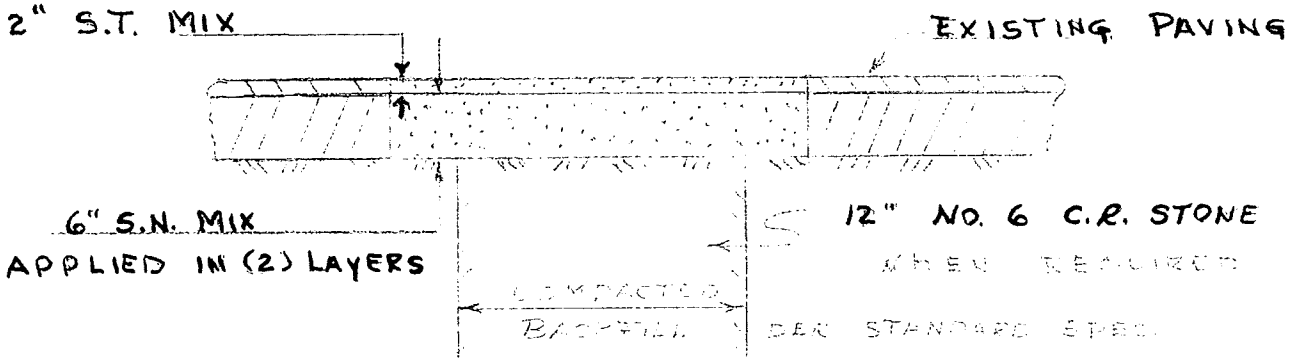


BITUMINOUS ROADWAY

| | | |
|---|---|---|
| Commissioners of Thurmont, Md. | MUNICIPAL STREET REPAIR OVER WATER & SEWER TRENCHES | DETAIL NO. 401 DATE: 6-2-82 |

## ALTERNATE SURFACE TREATMENT FOR PARKING LOTS

3" Bituminous Concrete

3" Dense Graded Aggregate

Approved Compacted Subgrade

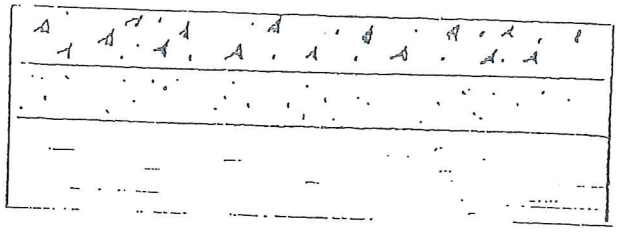

If subgrade does not meet compaction test, then additional depth of dense graded aggregate must be compacted.

Approved by the Commissioners of Thurmont: Marion W. Rice
Supt of Public Works

March 2, 1976

Commissioners
of
Thurmont, Md.

SURFACE TREATMENT
FOR PARKING LOTS
ALTERNATE METHOD

DETAIL
NO.
402

# Contractor's Construction Cut Sheet

Contract No. Project: Date:

Type of Pipe By:

Water _____ Sewer _____ Chkd.:

Bench Marks:

## Plan View

All elev. to highest point of hub.

| Station | Invert Slope | % Slope | Stakeout Data | | | Construction Data | | Remarks |
|---|---|---|---|---|---|---|---|---|
| | | | Offset | Top of Stake Elev. | Cut to Invert | Ground Elev. | Cut to Invert | |
| | | | | | | | | |

Date: 6-2-82

DETAIL NO. 403

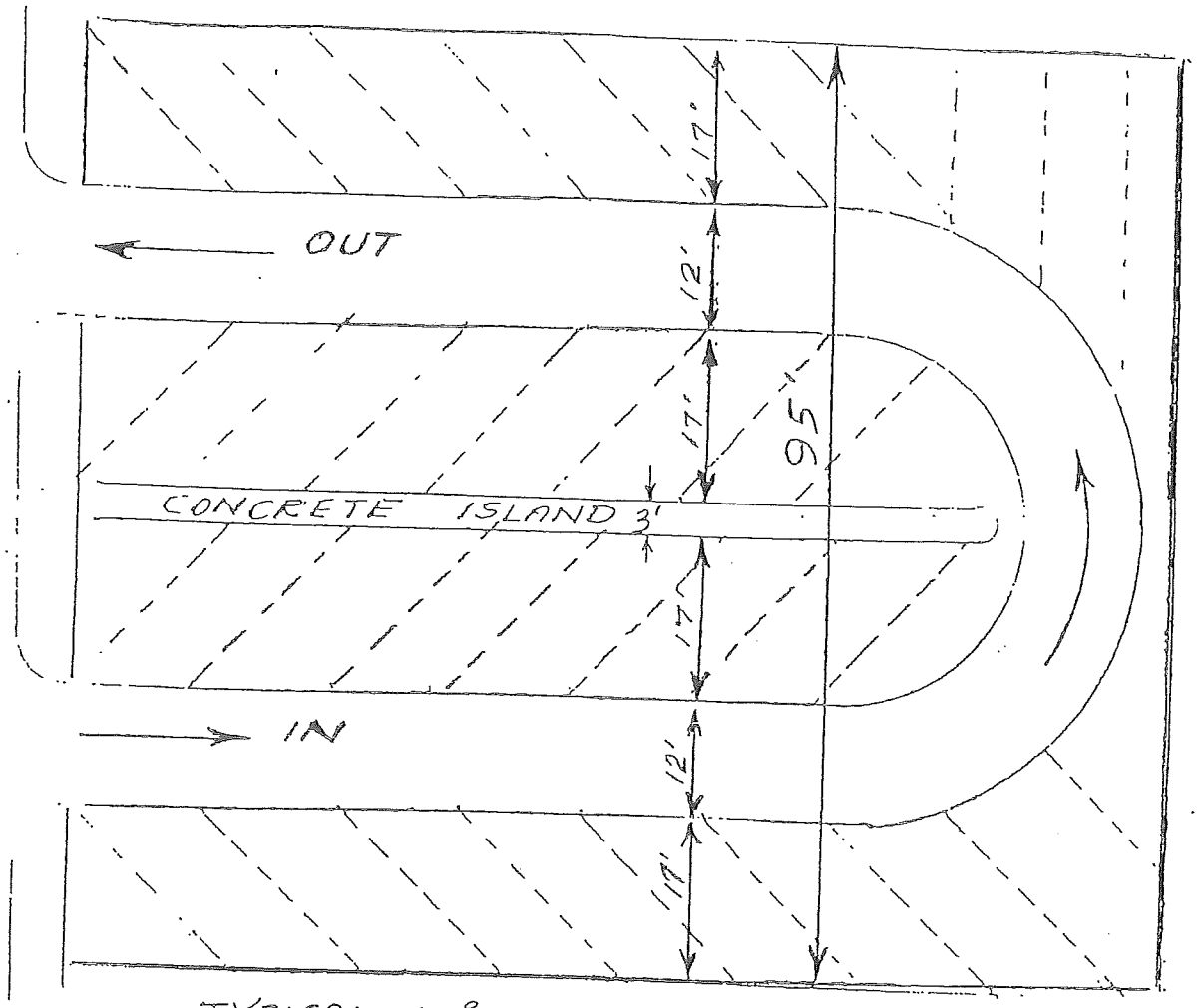


TYPICAL 45° ANGLE PARKING (28 SPACES)
4 ROWS OF SPACES - ENTRANCE & EXIT
AT ONE END ONLY
SIZE OF LOT REQUIRED 115' X 100'

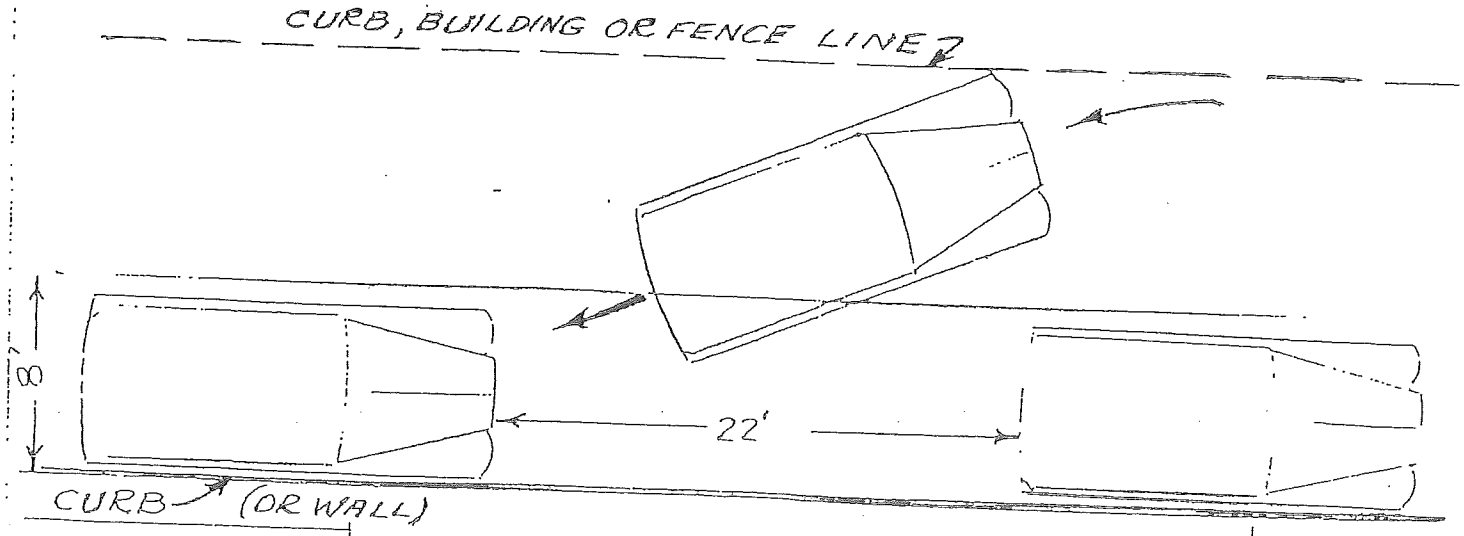


| | | |
|---|---|---|
| Commissioners of Thurmont, Md. | PARALLEL PARKING<br>NOTE - WIDTH REQUIRED FOR 2 ROWS PARALLEL PARKING 27'. | DETAIL NO. 404 |

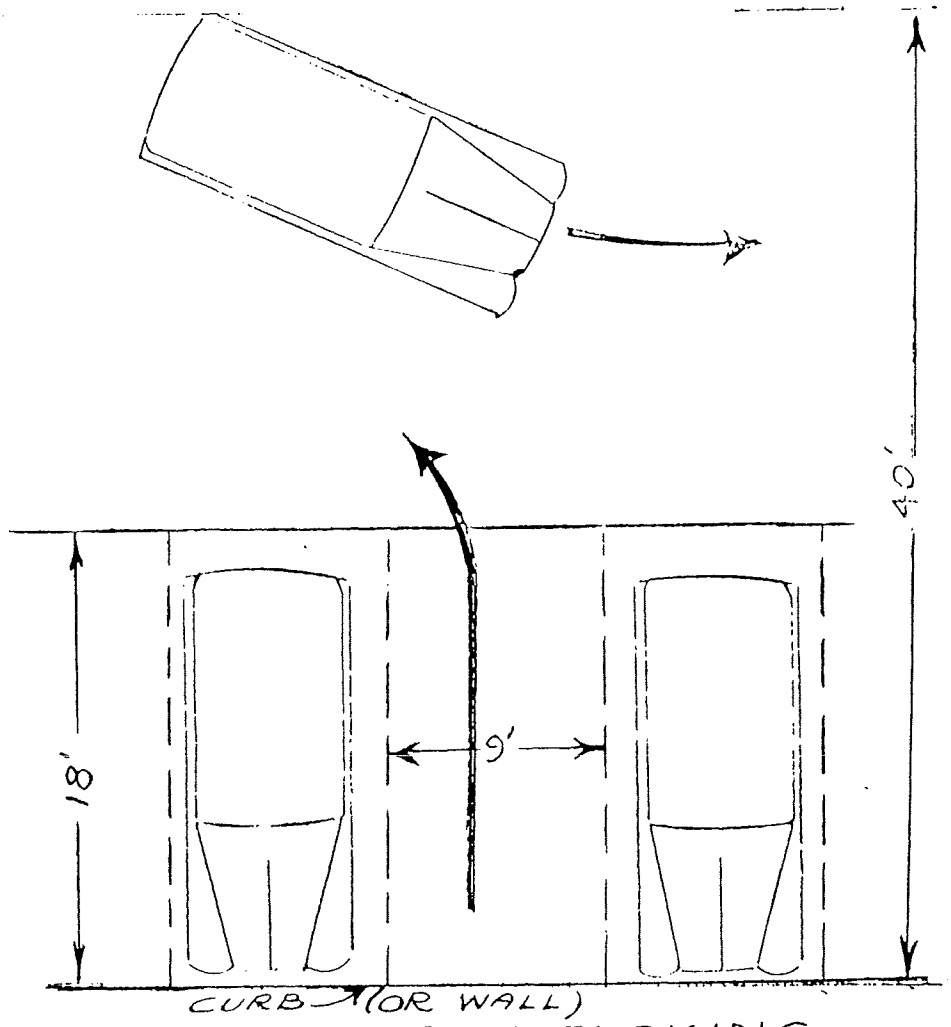


RIGHT ANGLE PARKING

9'-0"-WIDTH OF STALLS

NOTE- WIDTH REQUIRED FOR 2 ROWS - RIGHT ANGLE PARKING 58'

| | | |
|---|---|---|
| Commissioners of Thurmont, Md. | RIGHT ANGLE PARKING | DETAIL NO. 405 |
| | | DATE 6-2-81 |

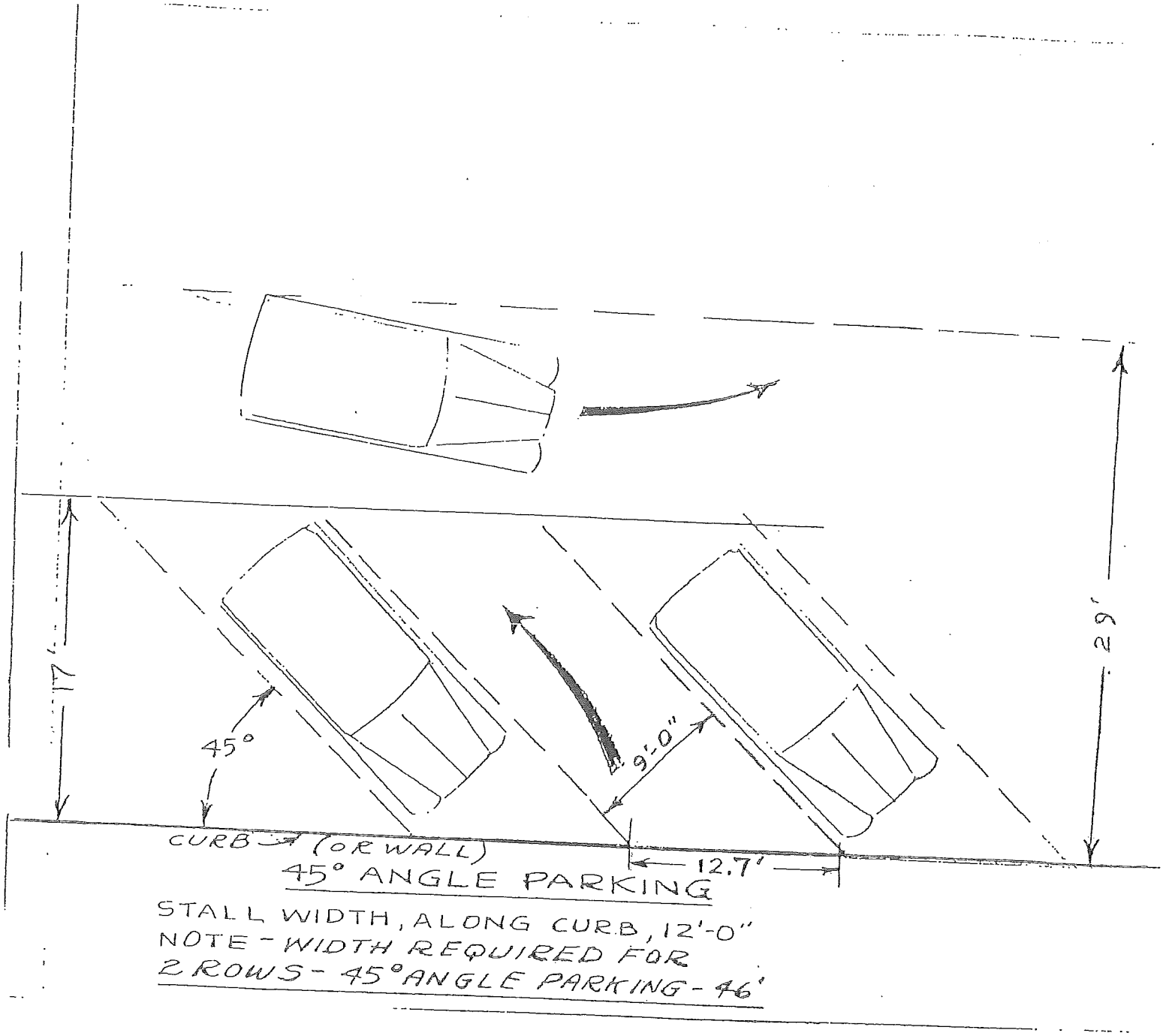


Commissioners
of
Thurmont, Md.

45° ANGLE
PARKING

DETAIL
NO.
406

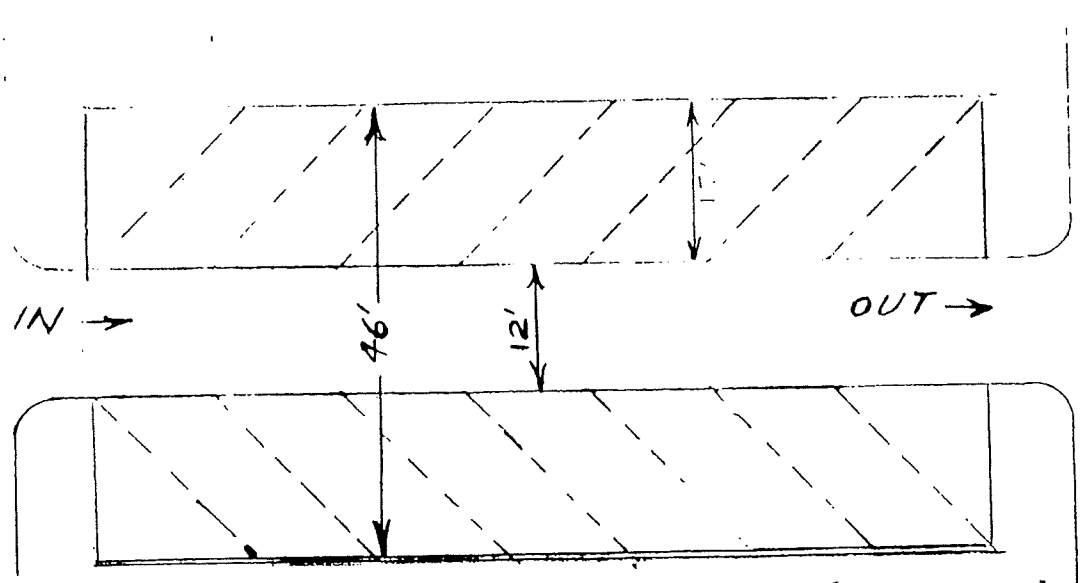


TYPICAL 45° ANGLE PARKING (12 SPACES)
SIZE OF LOT REQUIRED 50'X100'

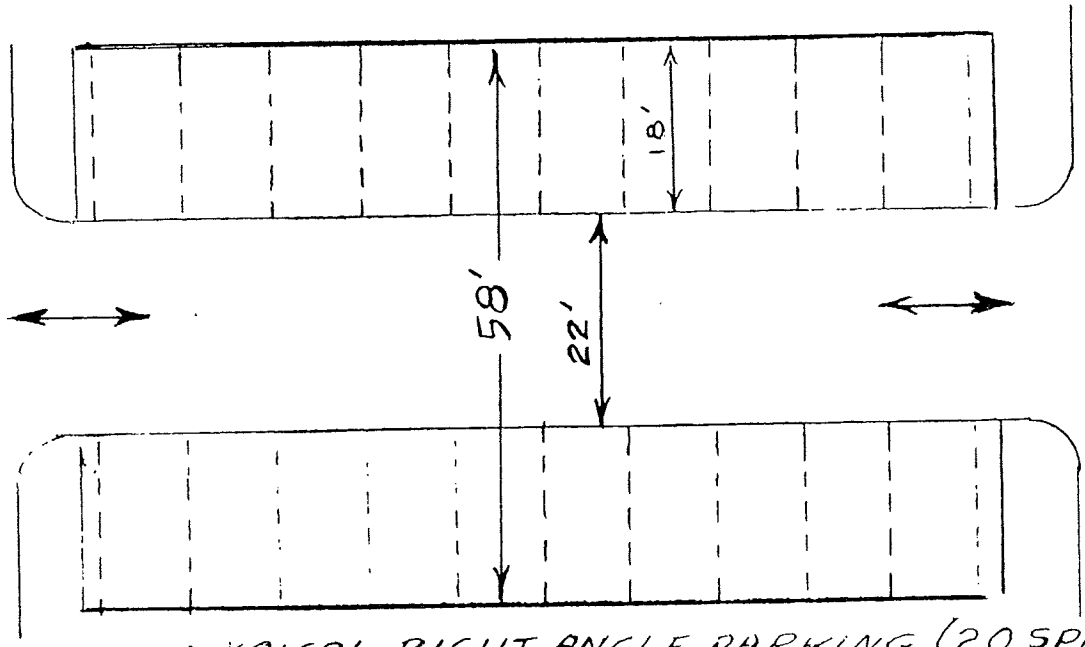


TYPICAL RIGHT ANGLE PARKING (20 SPACES)
SIZE OF LOT REQUIRED 60'X100'

Commissioners
of
Thurmont, Md.

RIGHT ANGLE
PARKING
DOUBLE ROW

DETAIL
407
DATE: 6-1-82

SPACE REQUIRED FOR PARKING CARS

Dimensions given are minimum, consistent with safe parking and movement.

| STREET SPACE USED FOR CURB PARKING | | | | | |
|---|---|---|---|---|---|
| Angle of Parking At Curb | Width of Street Used When Parked | Width Needed For Parking Plus Maneuvering | Length of Curb Per Car | | Cars Parked Per 100' |
| | | | 8.0' | 9.0' | |
| PARALLEL | 7' | 19' | 22.0' | 22.0' | 4.6 |
| 45 DEGREES | 17' | 29' | 11.3' | 12.7' | 8.8 |
| 60 DEGREES | 18' | 36' | 9.2' | 10.4' | 10.8 |
| 90 DEGREES | 17' | 40' | 8.0' | 9.0' | 12.5 |

Approved 9/1/71
The Commissioners of Thurmont

Commissioners
of
Thurmont, Md.

CAR SPACES
DIMENSIONS

DETAIL
NO.
408

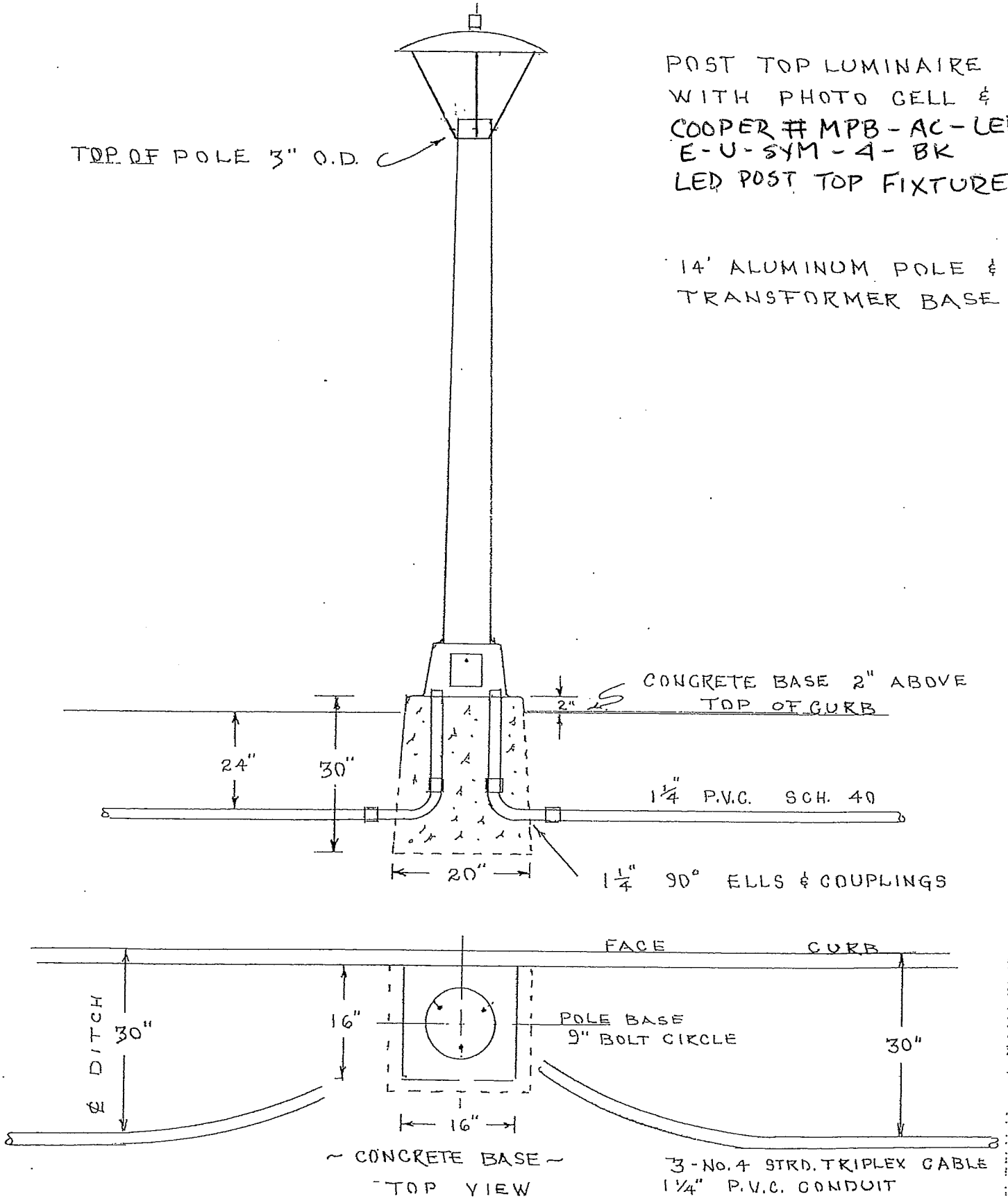


| | | |
|---|---|---|
| COMMISSIONERS OF THURMONT MD. APPROVED 11-6-85 | STREET LIGHT INSTALLATION 55W LED FIXTURE | DETAIL NO. 409 REVISED 7/15 |

# SCHEDULE OF PRICES

NOTE - THIS PROPOSAL SHALL BE FILLED IN BY THE BIDDER, WITH THE PRICES WRITTEN IN WORDS AND NUMERALS, AND THE EXTENSIONS SHALL BE MADE BY HIM. FOR COMPLETE INFORMATION CONCERNING THESE ITEMS SEE SPECIFICATIONS, SPECIAL PROVISIONS, AND CONTRACT FORM.

| Item | Estimated Quantities | Description | Unit Price Dollars | Unit Price Cents | Total Price Dollars | Total Price Cents |
|---|---|---|---|---|---|---|
| | | | | | | |
| | | | | | | |
| | | | | | | |
| | | | | | | |
| | | | | | | |
| | | | | | | |

TAIL

#410

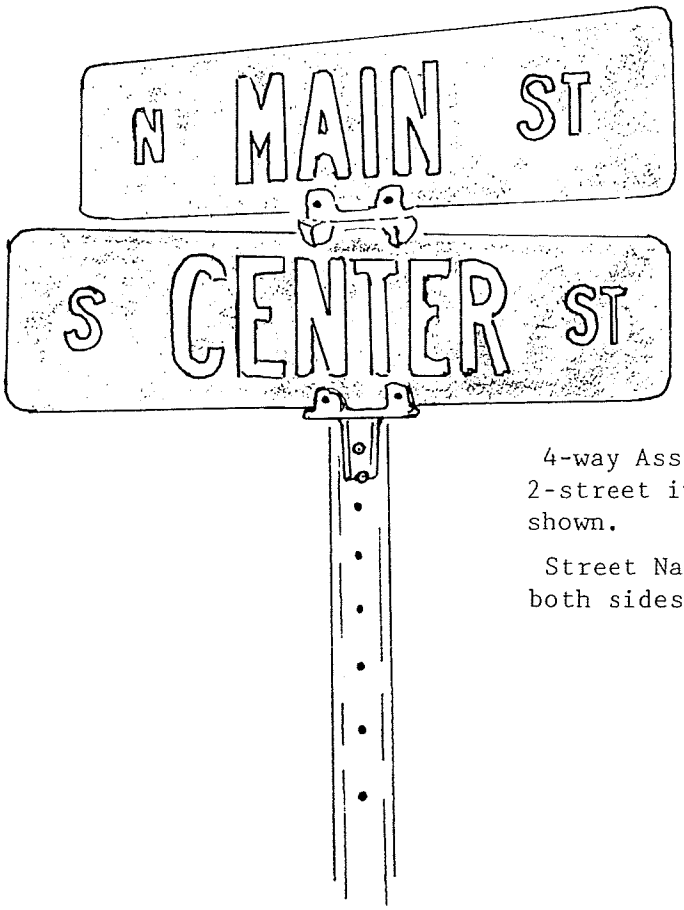


4-way Assembly For 2-street intersection shown.

Street Name is on both sides of each plate.

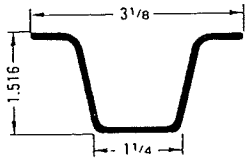


**2 lbs. per Ft.**

SPECIFICATIONS

Plates: Alodized aluminum, .080 thickness, 6" high by 24" or 30" wide as necessary. Thermo-setting acrylic baked enamel. Color: green.

Copy: Letters to be white reflectorized. 4 inch standard alphabet, Upper Case letters. Prefix and suffix abbreviations are 2 inch standard alphabet. Equal to Sargent-Sowell catalog #45-012.

Hardware: Smooth surfaced die cast aluminum. Zinc plated standard set screws. Brackets to be polished die cast aluminum equal to Sargent-Sowell, Inc. catalog # 45-419. Four-way assembly requires 90 degree bracket equal to Sargent-Sowell, Inc. catalog number 45-411.

Posts: High strength, 2 lb. per ft, channel post, 10 ft. green baked enamel. 3/8" holes on 1" centers, equal to Sargent-Sowell Catalog #03-112.

| Commissioners of Thurmont | Revisions Date: | Note: | **STREET NAME SIGNS** | Detail No. **411** Date: 8/6/86 |
|---|---|---|---|---|
| | | | | |

STANDARD SPECIFICATIONS

SANITARY SEWER SYSTEMS

Section 100

1. General

A. Description.

This section includes all work necessary to provide sanitary sewer systems complete in place in accordance with the Contract Documents.

B. Quality Assurance

1. Sanitary Sewer Field Tests

a. Sanitary sewers shall be tested under low air pressures listed on Table 1 after completion of backfill and approval of compaction. Inspect sewers and manholes prior to testing and eliminate discernible water leaks and debris. The Contractor may perform preliminary tests at his own discretion for his information, without the presence of the Superintendent at no cost to the Town. The Contractor shall schedule the proposed final test with the Superintendent which shall be performed in the presence of the Superintendent or his duly authorized representative. All material, equipment and labor required shall be provided by the Contractor. Sewers shall be tested from manhole to manhole or from manhole to terminal manhole.

b. Test shall be conducted as follows: Test plug shall be provided at each manhole and be securely braced. A suitable means of determining depth of groundwater level above the invert immediately before testing shall be provided and gauge pressures shall be increased accordingly. Air shall be slowly added to the portion of the pipe being tested until internal air pressure of 4 psi above the invert or above the groundwater table whichever is greater. No personnel shall be allowed to remain in the manhole after the air pressure has been increased. If in the opinion of the Superintendent there is any indication of leakage at the test plug, the pressure shall be relieved before taking steps to eliminate the leak. Test pressure shall be maintained for a minimum of two minutes after

which time the supply of air shall be disconnected. If pressure decreases to 3.5 psi, record the time required for the pressure to drop one psi from 3.5 to 2.5 psi. Pipes failing to maintain minimum acceptable holding times calculated from the table included herein will not be accepted.

Air Test Table

TABLE 1 Minimum Test Time for Various Pipe Sizes

| Nominal Pipe Size, in. | T (Time) min/100 ft. | Nominal Pipe Size, in. | T (Time) min/100 ft. |
|---|---|---|---|
| 3 | 0.2 | 21 | 3.0 |
| 4 | 0.3 | 24 | 3.6 |
| 6 | 0.7 | 27 | 4.2 |
| 8 | 1.2 | 30 | 4.8 |
| 10 | 1.5 | 33 | 5.4 |
| 12 | 1.8 | 36 | 6.0 |
| 15 | 2.1 | 39 | 6.6 |
| 18 | 2.4 | 42 | 7.3 |

Test Time (Info)

(1) Table 1 shows the required test time, T, in minutes/100ft. of pipe for each nominal pipe size. Test times are for an 1.0-psi (7-kPa) pressure drop from 3.5 to 2.5 psi (24 to 17 kPa).

(2) If the section of line to be tested includes more than one pipe size, calculate the test time for each size and add the test times to arrive at the total test time for the section.

(3) It is not necessary to hold the test for the whole period when it is clearly evident that the rate of air loss is less than the allowable.

c. Contractor's Option - Water Test

(1) Leakage test, Completed Sewers: Leakage, whether infiltration or exfiltration shall not exceed a rate of one hundred gallons per inch of diameter per mile of sewer per twenty-four hours in any section of piping between successive manholes.

(2) INFILTRATION testing shall take place when the natural ground water table is above the crown

of the piping at the higher end of the TEST SECTION. The amount of leakage shall be measured by a suitable weir or other devices as directed. EXFILTRATION tests shall be made on each section as directed.

(3) A section of sewer line shall be prepared for testing by plugging the upper side of the downstream manhole and all openings in the next upstream manhole except the downstream opening. The maximum head on any section under test will not exceed ten feet for clay pipe and thirty feet for ABS or PVC Pipe. Branch sewers running from Y-branches on the MAINS shall be plugged at the upper end (C.O. location) if the test head would cause them to overflow.

(4) A section of sewer line prepared as above shall be tested by filling with water to an elevation of one foot above top of the pipe in the upstream manhole, in mains without laterals or the test head must exceed the highest house service elevation, whichever is greater. The water should be introduced into the test section at least four hours in advance of the official test period to allow the pipe and joint material to become saturated with water. All entrapped air shall be removed prior to performance of test.

(5) At the beginning of test the elevation of the water in the upper manhole shall be carefully measured from a point near the water level such as a manhole rung. After a period of six hours or more, with the approval of the Superintendent, the water elevation shall be measured from the same point on manhole rung and the LOSS of water during test period calculated. Sewer sections showing leakage in excess of that allowed shall be repaired or reconstructed as necessary then retested.

2. Manhole Field Test

a. When air testing of lines is used or when required by the Superintendent, manholes shall be tested separately from the sewers. All sewers connecting to each

manhole to be tested shall be plugged and the manhole filled with water to cover the bottom of the rim.

The test duration shall be twenty-four hours and the allowable leakage for this duration shall be 1 gallon per foot of vertical depth of the manhole tested.

3. Pressure Tests for Force Mains

a. The Contractor shall provide equipment for and conduct pressure tests under pressures indicated on the Plans. Set up testing equipment in accordance with Standard Detail for testing water mains. Tests conducted on ductile iron pipe shall meet requirements of AWWA C-600. Tests conducted on concrete pipe shall meet requirements if AWWA C-600, modified as per AWWA Manual M II.

(1) Test pipe after completion of backfill operations in lengths directed by the Superintendent. Close ends of test sections with valves or plugs where possible, or provide test plugs.

(2) Fill the length of force main under test with water and subject it to the maximum of 100 psi sustained internal pressure plus water hammer, at the low point, as indicated in the Contract Documents. Maintain pressure for a minimum of two hours. Town personnel will operate all valves in the test section during this portion of the test.

(3) Should test results show any visible leakage, displacement or damage, the Contractor shall repair the leakage, displacement or damage and retest until specified conditions are met, to the satisfaction of the Superintendent, at no cost to the Town.

b. The maximum allowable leakage shall be determined from the following formula:

$$L = \frac{25\ DM}{24}$$

L = allowed leakage in gallons per hour

D = nominal diameter of pipe in inches

M = miles of pipe

4. Inspection and testing of pipe

a. The Superintendent may inspect and test all pipe fittings and joint material upon delivery to the site or at the factory. The pipe manufacturer or supplier shall furnish materials to be tested and labor as required to assist the Superintendent with tests.

b. Manufacturer or supplier shall provide ample space between rows of stockpiled pipe to facilities adequate inspection.

c. The pipe manufacturer or supplier shall provide to the Superintendent prior to commencing the inspection of pipe for an order, with the complete contract number, contractor's name, the pipe diameters, classes and footage of pipe needed to fill the order.

d. The pipe manufacturer or supplier shall provide evidence to the Superintendent prior to inspection, that there is an adequate quantity of pipe available of the required diameters, classes and designs for inspection.

e. The pipe manufacturer or supplier shall provide facilities for conducting load bearing test.

f. The pipe manufacturer or supplier shall provide competent personnel for the preparation and conducting or hydrostatic and load bearing tests. The Superintendent and/or Inspector has the right to be present during all phases of testing.

g. For reinforced concrete pipe furnished under this Section, provide test specimens selected at random for production pipe by the Superintendent.

Provide up to 1/2 of one percent of the number of pipes to be furnished for each size, but no less than two test specimens for each size and class for the load bearing test. Where hydrostatic tests are required, conduct such tests concurrent with the load bearing tests, using two pieces of pipe jointed together, of the same size, class and

production run, load bearing test specimens will not be accepted for incorporation into the work.

h. Deflection test, PVC Pipe

(1) At any time beyond thirty (30) days after final backfill of the trench and prior to the expiration of one (1) year the sewer lines shall be checked for deflection. Vertical deflection tests shall be performed on at least ten percent (10%) of the total footage of PVC pipe on this project unless additional tests are required by the Superintendent. Each test section shall be not less than two hundred (200) feet. The Contractor shall conduct the tests under the observation of the Superintendent and shall furnish all test equipment and labor for conducting the tests. Deflections of five percent (5%) or greater of the inside pipe diameter shall be considered unacceptable and such pipe shall be replaced by the Contractor at his expense. The deflection shall be checked by pulling a cylinder, sphere, or measuring device through the pipe.

5. Precast concrete manhole requirements are specified in Detail 103.

II. MATERIALS

A. General

1. The Contractor shall furnish and lay all vitrified clay, PVC and ductile iron pipe sewers, including excavation and refill and all appurtenances, such as manholes, and house connections as shown on the Drawings and/or as specified.

a. For house connections from the main line connection to the cleanout furnish either vitrified clay, extra strength; PVC pipe, wall thickness classification SDR-35.

b. For main line sewers less than 18 inches in diameter, unless otherwise indicated furnish either vitrified clay, extra strength, PVC pipe, type PSM, wall thickness classification SDR-35; or ductile iron pipe.

B. Materials Requirements

1. Pipe and Fittings

a. General-all pipe between structures shall be of the same size and material and shall be furnished by the same manufacturer. Each pipe length and all fittings shall be clearly marked with the manufacturer's name or trademark and pipe type or strength.

b. Polyvinyl chloride pipe and fittings 4 inches through 15 inches in diameter shall meet requirements of ASTM D 3034 and pipe and fitting 18 inches through 27 inches in diameter shall meet requirements of ASTM F679 as modified herein. Pipe with blisters, bubbles, cuts or scrapes on inside or outside surfaces, which appreciably damage the wall thickness, or other imperfections which impair the performance or life of the pipe, will be rejected.

(1) Joints shall be elastometric gasket joints resulting in watertight seals.

(2) PVC pipe shall be legibly marked as follows at intervals of five feet maximum; manufacturer's name or trademark, pipe size, PVC cell classification, appropriate legend such as PSM SDR-35 PVC Sewer Pipe, ASTM D 3034, manufacturer's lot number, date of manufacture and point of origin. Pipe not marked as indicated herein may be rejected.

(3) PVC fittings shall be legibly marked as follows: Manufacturer's name or trademark, normal size, PVC, ASTM D 3034 or ASTM F 679.

c. Vitrified clay pipe and fittings shall meet requirements of ASTM C700 standard strength and shall be furnished in lengths from two to five feet.

d. Vitrified clay pipe and fittings for under drains shall meet requirements of ASTM C700, standard strength and shall be furnished in lengths from two to five feet.

e. Ductile iron pipe for force mains or sewer mains shall meet requirements set forth in Section

2. Connection Appurtenances

a. Cast iron saddles for connection of 6 inch through 10 inch house connections to main line sewer shall be as manufactured by General Engineering or equal. Use mastic approved by saddle manufacturer. Gasket shall be as manufactured by Fernco or equal. Connect to existing PVC main with rubber gasketed tee and straps as indicated on the Standard Detail. Provide approved adaptor or coupling and Fernco gasket where required for watertight seal and as directed by the Superintendent. Provide watertight plug on PVC house connection at property line.

b. Stoppers

(1) Stoppers for all types of pipe shall be watertight and of an approved design as furnished by the pipe manufacturer.

3. Granular bedding material is specified in Detail 101.

4. Precast concrete manholes are specified in Detail 103.

5. Asphalt based waterproof coating for exterior of manholes shall be mineral filled solvent type meeting requirements of MIL-C-82052.

6. Quick setting non-shrink grout shall conform to requirements of Corp of Engineers CRD-588, octocrete, speedcrete or equal.

7. Flexible plastic rubber gasket between manhold and manhole frame shall be type B, in accordance with AASHTO M-198, Kent-seal #2 joint sealant distributed by General Engineering, or equal, and conform to Standard Detail.

III. EXECUTION

A. Preparation

1. Trench excavation and backfill shall be as specified in Detail 101. Before commencing excavation at each location, dig test pits as directed by the Superintendent. Excavate test pits as specified in Detail 101 sufficiently in advance of trench construction so that reasonable changes in line and grade can be made where the location of existing structures varies from that shown.

2. Provide granular bedding material under all sanitary sewer pipe in accordance with the Standard Details and Detail 101. Provide encasement and/or concrete cradle where indicated on the Plans. Ensure that pipes are well bedded.

B. Laying Pipe

1. Lay pipe to a true uniform line and grade as indicated with continuous bearing of barrel on cradle or bedding material. Handle pipe and fittings with care so as to avoid damage. Where indicated, provide erosion checks or concrete anchors in accordance with the Standard Details.

2. Lay pipe up-grade with the bell or groove pointing in the direction of upstream. Lay each section of pipe in such a manner as to form a close concentric joint with the adjoining section and to prevent sudden offsets in the flow line.

3. Construct mitered and curved bends where indicated in accordance with the Standard Details and the Plans. Curved bends shall have a uniform interior radius.

4. Place sufficient backfill on each section of pipe, as it is laid to hold it firmly in place.

5. Clean out the interior of the pipe as the work progresses. Utilize a suitable swab or drag in small diameter pipe and pull forward past each joint immediately after the jointing has been completed.

6. Keep trenches and excavations free of water during construction and until final inspection. When the work is not in progress, securely close open ends of pipe and fittings to prevent trench water, earth or other substances from entering the pipes or fittings.

7. Provided a minimum of three feet of cover over polyvinyl chloride, ABS and concrete pipe.

8. Provide a minimum of five feet of cover vitrified clay pipe, extra strength.

C. Sewer House Connections

1. Provide sewer house connections and sewer drop house connections where indicated in accordance with the Standard Details.

2. Where sewer exceeds 9'0" in depth, drop house connections shall be used to meet a depth of 8'6" below pavement profile at the cleanout at the property line.

3. Where possible, place house connections simultaneously with construction of new main line sewer before back-filling main line sewer.

4. Lay house connection pipe at a two percent grade, unless otherwise indicated on plan.

5. Mark the location of the end of the sewer connection pipe at the property line with a 2 x 4 timber, painted red, placed vertically from the bottom of the trench and extending two feet above grade.

D. Joints

1. Joints for Sanitary Sewer Pipe

a. Prior to joining pipe, liberally coat pipe joints with lubricant. Fit the bell or spigot with gasket according to manufacturer's instructions. Join the pipes with equipment designed for the purpose. Before the joint is completely home, check the position of the gasket using a suitable gauge. If the gasket is found to be dislocated, repeat the entire joining process using a new gasket. The rubber gasket shall be the sole element relied upon for water tightness.

2. Joints for Vitrified Clay Pipe

a. Immediately before joining vitrified pipe, liberally coat the bell with lubricant for pipe joints and fit the spigot with a gasket.

b. Join pipes using equipment designed for the purpose.

3. Joints for ductile iron pipe for main line sewers shall be as specified in Section

4. Joints for polyvinyl chloride pipe shall be elasto-metric gasket joints assembled with the manufacturer's recommendations.

E. Brick Construction

1. Perform brick construction as specified in Section for Utility Structures, in accordance with Standard Details and the Plans.

F. Manholes

1. Manholes shall be watertight.

2. Construct manholes or precast sections, in accordance with Standard Details and the Plans. Make watertight connection between base and risers. Place axis of manholes directly over the centerlines of the pipe unless otherwise shown.

3. Construct appropriate flow channels in the bottom of manholes, as shown on the Standard Details and plans and specified herein below.

   a. Channel shall be lined with brick or with cast-in-place concrete mix #1 using type II cement with silica sand and GP aggregate. Channel shall slope smoothly and evenly from the main pipe entering the manhole to the outlet pipe.

4. Drop Manhole

   a. Drop manholes shall be used when the invert of the inflow sewer is 1.75 feet or more above the manhole invert. When this difference in evaluation is less than 1.75 feet the manhole invert shall be filleted to prevent solids desposition.

   b. Drop manholes shall be constructed with outside drop connection. Due to the unequal earth pressure that would result from the backfilling operation in the vicinity of the manhole, the entire outside drop connection shall be encased in concrete per the Standard Detail.

5. Cut the pipe three inches from the inside face of the structures.

   a. When installing PVC pipe one of the adapters, as described herein above for connection to manholes, shall be provided and installed per the Standard Detail or in accordance to manufacturers procedure using quick setting non-shrink grout. All other pipe shall be directly mortared into the manhole opening with non-shrink grout.

6. Install additional manhole steps and cast iron watertight frame and cover for each manhole and adjust the frame and cover to proper grade by the use of grade rings, if required.

   a. Provide flexible plastic gasket as specified hereinbefore between the top of the manhole and the frame and cover.

   b. Cement rubber gasket in watertight manholes requiring the inner cover in groove with a material not affected by water such as Permatex or equal.

7. Contractor shall furnish a manhole insert as called for in the specification.

   b. The manhole insert shall effectively reduce or prevent surface water inflow through manhole covers. The insert shall also prove effective in keeping grit, sand, salt, chemical spills, foreign objects, road oils, etc. from entering the collection system lines.

MATERIAL AND DESIGN:

   c. The manhole insert shall be made from a "durable" High Density Polyethylene Copolymer material that meets ASTM Specification Designation D-1248 Class A, Category 5, Type 111. This material shall have superior stress crack resistance, combined with a high impact strength and rigidity.

   The manhole insert shall have a minimum impact brittleness temperature of -105 degrees F in accordance with ASTM D 746-70.

   Softening temperature shall be 254 degrees F, meeting all requirements of ASTM D 1525-70.

   The insert will have a tensile strength of 3700 psi, and an elongation factor of 800%, meeting all requirements of ASTM D 638-71A.

   The thickness of the insert shall be a uniform 1/8".

   The insert shall be manufactured to dimensions provided by the purchaser to allow easy installation within the manhole frame.

   The insert shall have one of the following systems for relieving gas and/or vacuum pressure from the manhole.

Two 3/16" holes are installed 180 degrees apart, exactly 1" from the top of the insert, to allow for constant ventilation. This patented "no valve" method of ventilation will not be affected by grit accumulation, nor have any moving parts subject to corrosion. The venting system shall not allow water to completely fill the insert, which during cold weather could freeze and lift the manhole cover.

At the discretion of specifying agent, an alternative ventilation system utilizes a valve manufactured of a Polypropylene Ethylene compound. The valve material shall be unaffected by temperatures within a range of -70 degrees F to 350 degrees F. The valve body shall be corrosion and wear resistant and be designed to release gas pressure at approximately 1 psi, and vacuum pressure at approximately 2 psi.

GASKET:

The insert shall have a closed cell neoprene gasket with adhesive backing, installed upon the insert rim by the manufacturer.

MEASUREMENT:

d. The manhole insert shall be manufactured to fit the manhole frame rim upon which the manhole cover rests. Exact measurements shall be required from the purchaser.

Instructions and measuring diagrams will be made available to the purchaser, to insure a proper fit of manhole insert within the manhole frame.

INSTALLATION:

The manhole frame rim shall be cleaned of all dirt and debris before placing the manhole insert upon the rim.

The manhole insert shall be fully seated around the manhole frame rim.

The manhole cover is replaced as before, and the installation is complete.

REMOVAL:

The manhole insert shall have a corrosion resistant nylon strap installed for easy removal and re-installation into the manhole frame.

e. When requested, the contractor shall submit for approval of the Superintendent of Public Works samples of the material he proposes to use in ample time for a proper determination.

G. SEWER VENTS

1. Provide sewer vent as shown on plans, in accordance with the Standard Pipe Detail.

2. Steel pipe and fitting for the sewer vent shall meet requirements set forth in Section.

H. REPAIR OF LEAKS IN SEWERS

1. Repairs of leaks in pipe 15 inches and less in diameter shall be made using a full circle repair clamp as indicated in the Standard Detail.

2. Repair of leaks in pipe larger than 15 inches in diameter shall be as directed by the Superintendent.

I. SEWER HOUSE CONNECTION RENEWALS

1. Utilize existing tap at main line unless otherwise directed by the Superintendent. Otherwise, abandon existing tap and retap utilizing proper sized saddle or thimble or cut in wye branch; or remove the existing tap and cut in an additional wye, as determined by the Superintendent.

a. Plug abandoned existing house connections and taps which have been replaced utilizing approved watertight plugs or cut out existing pipe with tap in main line and provide new pipe with sewer clamps in accordance with Standard Detail.

2. Retap the main line as follows:

a. Tap all pipe with power operated Smith and Loveless tapping machine and cutter or equal, with a diamond tip cutter. Tapping shall be performed only by qualified personnel.

b. Install General Engineering cast iron sewer saddles for tapping all pipe smaller than 12 inched in diameter. Use Fernco Compression type gaskets at the joints between the saddle and pipe, in accordance with the Standard Details. Installation of General Engineering saddles shall be performed only by qualified personnel.

3. Where sewer house connection is of the same size as the existing sewer, cut in additional wye branch, as appropriate, using sewer repair clamps shown on the Standard Details.

4. Where indicated or directed by the Superintendent, tap directly into manholes for sewer house connections.

5. Provide clean outs installed four feet back of the property line or as indicated on the plans for all sewer connection renewals in accordance with the Standard Details.

COMMISSIONERS OF THURMONT

STANDARD SPECIFICATIONS

SANITARY SEWER SYSTEMS

TESTING PROCEDURES

1. General

A. Description.

This section includes all work necessary to provide sanitary sewer systems complete in place.

B. Quality Assurance.

1. Sanitary Sewer Field Tests

a. Sanitary sewers shall be tested under low air pressures listed on Table 1 after completion of backfill and approval of compaction. Inspect sewers and manholes prior to testing and eliminate discernible water leaks and debris. The Contractor shall schedule the proposed final test with the Superintendent which shall be performed in the presence of the Superintendent or his duly authorized representative. All material, equipment and labor required shall be provided by the Contractor. Sewers shall be tested from manhole to manhole or from manhole to terminal manhole.

b. Test shall be conducted as follows: Test plug shall be provided at each manhole and be securely braced. A suitable means of determining depth of groundwater level above the invert immediately before testing shall be provided and gauge pressures shall be increased accordingly. Air shall be slowly added to the portion of the pipe being tested until internal air pressure of 4 psi above the invert or above the groundwater table whichever is greater. No personnel shall be allowed to remain in the manhole after the air pressure has been increased. If in the opinion of the Superintendent there is any indication of leakage at the test plug, the pressure shall be relieved before taking steps to eliminate the leak. Test pressure shall be maintained for a minimum of two minutes after which time the supply of air shall be disconnected. If pressure decreases to 3.5 psi, record the time required for the pressure to drop one psi from 3.5 to 2.5 psi. Pipes failing to maintain minimum acceptable holding times calculated from the table included herein will not be accepted.

Air Test Table

Table 1 - Minimum Test Time for Various Pipe Sizes

| Nominal Pipe Size, in. | T (Time) min/100 ft. | Nominal Pipe Size, in. | T (Time) min/100 ft. |
|---|---|---|---|
| 3 | 0.2 | 21 | 3.0 |
| 4 | 0.3 | 24 | 3.6 |
| 6 | 0.7 | 27 | 4.2 |
| 8 | 1.2 | 30 | 4.8 |
| 10 | 1.5 | 33 | 5.4 |
| 12 | 1.8 | 36 | 6.0 |
| 15 | 2.1 | 39 | 6.6 |
| 18 | 2.4 | 42 | 7.3 |

Test Time (Info)

(1) Table 1 shows the required test time, T, in minutes/100 ft. of pipe for each nominal pipe size. Test times are for an 1.0-psi (7-KPa) pressure drop from 3.5 to 2.5 psi (24 to 17 kPa).

(2) If the section of line to be tested includes more than one pipe size, calculate the test time for each size and add the test times to arrive at the total test time for the section.

(3) It is not necessary to hold the test for the whole period when it is clearly evident that the rate of air loss is less than the allowable.

c. Contractor's Option - Water Test

(1) Leakage test, Completed Sewers: Leakage, whether infiltration or exfiltration shall not exceed a rate of one hundred gallons per inch of diameter per mile of sewer per twenty-four hours in any section of piping between successive manholes.

(2) INFILTRATION testing shall take place when the natural ground water table is above the crown of the piping at the higher end of the TEST SECTION. The amount of leakage shall be measured by a suitable weir or other deivces as directed. EXFILTRATION tests shall be made on each section as directed.

(3) A section of sewer line shall be prepared for testing by plugging the upper side of the downstream manhole and all openings in the next upstream manhole except the downstream opening. The maximum head on any section under test will not exceed ten feet for clay pipe and thirty feet for ABS or PVC pipe. Branch sewers running from Y-branches on the MAINS shall be plugged at the upper end (C.O. location) if the test head would cause them to overflow.

(4) A section of sewer line prepared as above shall be tested by filling with water to an elevation of one foot above top of the pipe in the upstream manhole, in mains without laterals or the test head must exceed the highest house service elevation, whichever is greater. The water should be introduced into the test section at least four hours in advance of the official test period to allow the pipe and joint material to become saturated with water. All entrapped air shall be removed prior to performance of test.

(5) At the beginning of test the elevation of the water in the upper manhole shall be carefully measured from a point near the water level such as a manhole rung. After a period of six hours or more, with the approval of the Engineer, the water elevation shall be measured from the same point on manhole rung and the LOSS of water during test period calculated. Sewer sections showing leakage in excess of that allowed shall be repaired or reconstructed as necessary then retested.

2. Manhole Field Test

a. When air testing of lines is used or when required by the Engineer, manholes shall be tested separately from the sewers. All sewers connecting to each manhole to be tested shall be plugged and the manhole filled with water to cover the bottom of the rim.

The test duration shall be twenty-four hours and the allowable leakage for this duration shall be one gallon per foot of vertical depth of the manhole tested.

3. Pressure Tests for Force Mains

a. The Contractor shall provide equipment for and conduct pressure tests under pressures indicated on the Plans. Set up testing equipment in accordance with Standard Detail for testing water mains. Tests conducted on ductile iron pipe shall meet requirement of AWWA C-600. Test conducted on concrete pipe shall meet requirements if AWWA C-600, modified as per AWWA Manual M II.

(1) Test pipe after completion of backfill operations in lengths directed by the Superintendent. Close ends of test sections with valves or plugs where possible, or provide test plugs.

(2) Fill thelength of force main under test with water and subject it to the maximum of 100 psi sustained internal pressure plus water hammer, at the low point. Maintain pressure for a minimum of two hours.

(3) Should test results show any visible leakage, displacement or damage, the Contractor shall repair the leakage, displacement or damage and retest until specified conditions are met, to the satisfaction of the Superintendent.

b. The maximum allowable leakage shall be determined from the following formula:

$$L = 25 \frac{DM}{24}$$

L = allowed leakage in gallons per hour

D = nominal diameter of pipe in inches

M = miles of pipe

STANDARD SPECIFICATIONS

WATER SYSTEM

Section 200

GENERAL

A. Description.

1. This section includes construction, testing and disinfecting of permanent water supply, fire protection and distribution piping to the limits indicated in accordance with the Contract Documents.

B. Quality Assurance.

1. Chlorination and field tests

a. The Contractor without extra compensation shall chlorinate and field test all new main installation before connecting them to the existing system. The Engineer shall determine the amount of main to be chlorinated and tested at any one time and reverses the right to separate the installation into several test sections, in the event of long extensions, or installation of pipe designed for different head conditions, or for other reasons.

b. The Contractor shall cap and buttress the new main between the sections of the existing pipe.

c. The Contractor shall furnish at his own cost and expense all necessary bulkheads, caps, plugs or other fittings required to stop off, temporarily, the main for test purposes.

d. After the main is satisfactorily tested according to the requirements of the specifications, the Contractor shall remove the buttresses and caps and connect the new main with the existing main by means of sleeves and spacers or other approved methods.

e. A hydrous solution of high test calcium hypochlorite of lime or chlorine gas shall be discharged into the main near the point where the main is charged per AWWA C601. The amount of high test calcium hypochlorite of lime or chlorine gas shall be sufficient to produce a residual of ten parts per million by weight, of free chlorine, after a contact period of twenty-four hours. If the required residual is not obtained, the Contractor shall repeat the chlorination until this residual requirement is met.

f. While the main is filled with chlorinated water, the pressure shall be raised to 150 psi. This test pressure shall be maintained at the high point on the main for at least two hours.

g. After the satisfactory completion of the hydrostatic tests the new installation shall then be subjected to a leakage test at working pressure, of at least twenty-four hours duration. This test shall show a leakage not exceeding twenty-four gallons per inch of diameter per mile per twenty-four hours. Until the leakage test requirements are met, the Contractor shall make all repairs that may be necessary to to accomplish this. After all test have been satisfactorily completed. including the removal of chlorine the Contractor shall connect the new water main with the distribution system.

h. During all leakage testing, no valve in that section under test shall be operated by other than County personnel who have been assigned to testing duty by the Engineer.

i. Should test results show any visible leakage, displacement or damage, the Contractor shall repair the leakage, displacement or damage and retest until specified conditions are met, to the satisfaction of the Engineer, at no cost to the County.

j. Testing for sprinkler systems including yard piping shall be hydrostatically tested at not less than 200 psi. This test pressure shall be maintained and measured at the low point of the system for at least two hours. Installation and testing of the system shall be in accordance with National Fire Protection Association Standard No. 13 "Sprinkler System".

2. Quality assurance for precast concrete utility structures is specified.

## II. MATERIALS

### A. General

1. The Contractor shall furnish all pipe, fittings, fire hydrants, valves, valve boxes, meter yokes and vaults, and manhole or vault frames, covers and steps and all glands, gaskets, nuts and bolts for mechanical joint pipe and all other necessary materials for proper completion of the work.

2. The Town will furnish all meters.

B. Materials Requirements

1. Pipe and fittings

a. General - all pipe of the same material and size shall be furnished by the same amnufacturer. Each pipe length and fitting shall be clearly marked with the manufacturer's name and trademark.

b. Ductile iron pipe shall meet the requirements of AWWA C151 with mechanical joint or push on joint. Pipe shall be bituminous coated outside and cement lined with double thickness inside in accordance with AWWA C104. Cure cement lining with a bituminous seal coat.

(1) 3" & 4" size pipe shall be class 51

(2) 6" and larger size pipe shall be class 50

(3) Fittings for use with ductile iron pipe shall be Class 250 gray cast iron conforming to AWWA C110 and C151, or Class 350 ductile iron. Ductile iron shall conform to ASTM A536, minimum grade 70-50-05. Nominal thickness of DI fittings shall be equal to, or exceed, Class 53 ductile iron pipe thicknesses. Radii of curvatures shall conform to AWWA C110. Provide accessories as required to connect with plain end of slip joint pipe or cut pipe. Gaskets shall be plain rubber and tee head bolts and hexagon nuts shall be low alloy steel, USALLOY, CORTEN-LOY or equal.

(4) Fittings shall be of uniform quality, true to pattern, strong, tough, of even grain, sound, smooth, without cold shuts, swells, scabs, blisters and sand holes, cracks or other defects. Plugs, filled holes and welds will not be allowed. Fittings shall be clean and entirely free of grease and oil, substantially free of blacking, dirt, sand, rust, slag and fluxing. Remove rough spots in sockets or on plain ends or walls before lining and coating.

(5) Fittings shall be bituminous coated outside and cement lined with double thickness inside in accordance with AWWA C104.

(6) Flanges shall be cast intergrally with body and shall have the same thickness over their entire circumference. Faces shall be perpendicular to axis of pipe.

(7) Bolt holes in fitting flanges shall straddle the vertical centerline when the fitting is positioned to change the fluid flow in a horizontal direction. Drill or core bolt holes completely through flanges so as to be free of sand and projections. Gage to assure dimensional bolt circle control, location and size of holes and concentricity with the socket or gland lip.

c. Copper pipe shall be seamless, type K and meet requirements of ASTM B88. Fittings shall be copper meeting requirements of ASTM B62, free of injurious blowholes, porosity, shrinkage, cracks or other injurious defects, smooth and well cleaned, and shall meet requirements of AWWA C800 and the following:

(1) Corporation Stops and Couplings:

Copper tube outlets of all corporation stops shall be of the flare or pack joint type and shall be fitted with a coupling nut threaded according to AWWA C-800, which shall have a machined bearing in the skirt part equal to or greater in length than the outside diameter of the corresponding size type K copper pipe, in inches. Protect inlet threads with a plastic coating in shipment.

The corporation stops and couplings size 3/4" thru 1" shall be Mueller catalog number H-15000, or H-15050; Ford number F600 or F1000. Test certificates shall be furnished by the Contractor, certifying that all corporation stops have been subjected to a production line test by the manufacturer of 85 psig air pressure while submerged in water. in both open and closed position of the key, and shall show no leakage. Period of observation shall be ten second minimum. Stops shall be subjected to a 300 psig hydrostatic test and shall not leak top or bottom and shall not show signs of structural failure.

(2) Couplings:

The copper to copper couplings shall be those known as the three part type consisting of a tubing connection coupling nut. The copper tube end of the couplings shall be the flare or pack joint type for connecting to type K copper service pipe. The opposite end, and all coupling nuts shall be threaded in accordance with AWWA C-800.

The iron pipe end of all copper to iron pipe fittings shall be threaded in accordance with the National Bureau of Standards Handbook H-28 Stan-

dard for American National Pipe Threads.

The copper line couplings shall be one of the following manufacturer's or equal.

CATALOG NUMBERS

| DESCRIPTION | MUELLER | FORD |
|---|---|---|
| 3 Prt. Cu. to Cu. | H-15400 | C22 Series |
| Cu. to M. IPT | H-15425 | C28 Series |
| Cu. to Fem. IPT | H-15450 | C22 series |
| Strt. Pack joint | | C44 Series |

(3) Meter Yokes and Fittings

Yoke shall be Ford # V-72-18 5/8" x 3/4".

2. Joint Material.

Mechanical joints shall conform to requirements of AWWA. Push on joints shall conform to requirements of AWWA C111.

Flanged joints shall conform to requirements of AWWA C110.

Mechanical couplings shall be as indicated, manufactured by Dresser, Smith Blair or equal.

3. Valves

a. Gate Valves, size 6", 8" and 10", shall be iron body, bronze mounted, mechanical joint, double disc, parallel seat, with non-rising stem and stand 2 inch square operating nut, conforming to AWWA C500. Extension stems shall be provided for valves where operating nut is more than 4 feet below finished grade. All valves shall open left.

b. Air release valves shall be two inch, universal, with surface diameter 1/4 inch, range of working pressure from 0 to 165 pounds, stainless steel float, resilent seat and screwed connection; Crispin Model U-20, Apco combination air release valve Model 145-C, or equal.

c. Globe valves shall be two inches, Class B meeting requirements of FS WW-51A, 150 lbs. screwed.

d. Flanged backflow preventer shall be complete with gate valve and the inlet side of the inlet gate valve shall be fitted with the necessary vent cock and fittings. Valve body shall be galvanized cast iron with bronze working parts and springs, plastic coated carbon steel valve discs, neoprene coated cotton duck diaphragm.

Valve shall be designed to auction a maximum working pressure of 175 psi and a hydrostatic test pressure of 350 psi.

Valve shall be Hershey Products, Inc. Model Bosco, Cla-Vel Co., or equal.

e. Valve boxes shall be of cast iron, complete with cover marked WATER. Valve boxes shall be extension type, with screw adjustment, and with flared base. The boxes shall be of such length as to permit adjustment in both directions, to the depth of cover required over the pipe at the valve location. Boxes shall not be set so as to transmit surface loads to the valve. (See Standard Detail).

4. Fire Hydrants

American Darling B-62-B, 3-way, dry top, compression type with safety flange, painted safety yellow, conforming to AWWA C502. Each hydrant shall have one 4-1/2 inch diameter pumper (steamer.) nozzle and two 2-1/2 inch hose nozzles, nozzle gaskets, 5-1/4 inch valve, 1-1/2 inch pentagonal operating nut, open left. Both the hose nozzles and pumper (steamer) nozzle shall have National Standard Thread. Hydrants shall be designed for 4-1/2 foot bury and six (6) inch mechanical joint inlet.

a. Indicate depth of bury by one of the following methods:

1. Attach metal tag, location and tag as approved by the Engineer.

2. Raised figures on the barrel to show depth in feet. The figure shall be on the barrel - just below the swivel flange so that it is visible when installed. The figure shall be raised at least 1/8 inch above the barrel surface and the height of the figure shall be at least one inch and shall be integrally cast with the barrel.

b. The elbow shall be cast iron or ductile iron in accordance with ANSI-21.10. The inlet connection shall be a six (6) inch, Class 250, mechanical joint bell and shall meet the general requirement for Standard Mechanical Joint Cast Iron Pipe and Fittings, furnished with necessary accessories for each such mechanical joint. The bolts shall be made of low alloy steel such as Corten or U.S. Alloy. The gaskets shall be made of rubber. Glands shall be made of high strength cast iron consistent in design and strength with the elbows with which they are to be used.

Elbow or inlet connection shall be shipped assembled with hydrant.

c. The outside of the hydrant above the finished ground line to a height just above the hydrant nozzles (or to the hydrant bonnet, if so construed) shall be thoroughly cleaned, primed and then painted with two coats of Rhinamel Gray No. 202-31-00 paint as manufactured by the Grow Chemical Coating Corp., Tropical Paint Div., or equal. Top section of hydrant above the nozzles (on the hydrant bonnet, if so construed) shall be likewise cleaned and then painted with two coats of Safety Yellow as manufactured by the previously mentioned vendor, or equal. Proposed paint substitution shall be presented to the Superintendent with complete details, painting design, paint color chips and at least one pint of the proposed paint.

d. External operating and cap nuts shall be of pentagonal shape. The pentagon shall measure 1-1/2 inches from point to flat at the base of the nut and 1-7/16 inches at the top.

Hydrant shall be open by turning operating nut left (counter clockwise). Direction of opening shall be indicated on top of operating nut by means of a raised arrow.

e. Stuffing box packing shall be the "O" ring seal.

f. The following parts are to be bronze as specified in AWWA C-502.

Drain Valve, Valve Seats or Seat Rings Stuffing Box (Bronze-brushed Cast Iron) Stuffing Box Parts Hold Down Nut Threaded Stem Nut (sleeve).

g. The barrel of the hydrant shall be in two cast iron or ductile iron sections, designed to break at or near the finished grade; the cast iron shall conform to American Standard Specifications ANSI-A21-51. The nozzle section shall be attached to the lower barrel section by means of a tapered flange ring held in place by suitable "hydrant head" bolts and nuts. The flange and flange rings shall be so designed that the top or upper barrel section, including the bonnet and operating nut, may be revolved 360 degrees for facing without disturbing the bottom section of the barrel. (The use of a split bronze insert ring will not be permitted).

h. Fire hydrant connection appurtenances shall be as follows:

(1) Anchor coupling shall be from 12 to 13 inches long, weighing approximately 70 pounds, double thickness cement lined, and bituminious sealed as per AWWA C104, six inch cast iron mechanical joint, class 250, with integrally cast standard mechanical joint gland on one end and one loose end rotable ductile iron gland on the other end. The plain end shall be of sufficient dimension to form a mechanical joint with a six inch mechanical joint bell.

(2) Straps, bolts and nuts shall meet requirements of ASTM A36 and A301, as specified in Section

10. Castings shall be grey iron as specified in Section

11. Connection Appurtenances

a. Tapping sleeves shall be mechanical joint, furnished complete with plain rubber gaskets, mechanical joint accessories, or armored tipped, and suitable for use on Ductile iron pressure pipe. Hub sleeves shall fit Class "D" pipe with maximum allowance for outside diameter. Connecting flange joint between sleeve and valve shall conform to MSS (Manufacturers Standardization Society of the Valve and Fittings Industry) Standard SP60, for pipe up to 12 inches in diameter.

b. Tapping assemblies, saddles, and clamps shall be as per Interpace, Adams, Mueller or equal. Provide threaded outlet as required.

c. Service clamps shall be double strap galvanized with corporation stop thread of appropriate size, neoprene gasket cemented in place, cadmium plated nuts and straps (for ductile iron pipe) and shall be the diameter required. Clamps shall be as manufactured by Mueller, Skinner, Dresser or equal.

d. Service saddle for installation on Class 150 pressure pipe shall be cast iron with AWWA threads sized as required, furnished with neoprene gaskets. Size shall be as manufactured by General Engineering Co., or equal. Use mastic supplied by, or approved by, the manufacturer.

III. EXECUTION

A. Laying Pipe

1. A minimum of 3'6" cover shall be maintained over all mains.

2. Trench excavation and backfill and test pits shall be specified in Detail 101 . Excavate test pits as specified in Detail sufficiently in advance of trench construction so that reasonable changes in line and grade can be made where the location of existing structures varies from that shown. The Contractor shall adjust pipeline profile as required at connections to existing mains, subject to the approval of the Superintendent. Completely excavate sufficient trench to assure that no unforeseen obstructions exist before commencing pipe installation. Work occasioned by failure to take such precautions shall be performed at no cost to the Town.

3. Only proper and suitable tools and appliances for the safe and convenient handling and laying of pipes and fittings shall be used. Pipe, fittings and valves shall be carefully handled and lowered into the trench. Under no circumstances shall any pipe or fitting be dumped or rolled into the trench or be allowed to drop against the pipe or fitting already in the trench. Great care shall be taken to prevent the pipe lining and coating from being damaged, and any lining of coating damaged in any way shall be repaired by the Contractor to the satisfaction of the Superintendent.

4. The pipe and fittings shall be thoroughly cleaned before they are laid and shall be kept clean until the acceptance of the completed work. Just before being lowered into the trench, each length of pipe or fitting shall be well swabbed to insure the removal of any dirt or foriegn matter therefrom. After being placed in the trench, and prior to joining one tablespoon of HTH or Perchloron, shall be placed in each length of pipe or fitting. After the pipe has been "homed", the end shall be kept covered until the next length is laid. At the close of work each day the end of the pipe line shall be tightly closed with an expansion type stopper so that no dirt or foriegn substance may enter the line and this stopper shall be kept in place until pipe laying is again resumed.

5. Installation

a. Align pipe so that no shoulder or unevenness results on the inside of the mains. Cutting where required to fit into the line or to bring to the required location, shall be done in a satisfactory manner with an approved cutting tool or tools which will leave a smooth edge and at right angles to the axis of the pipe and not otherwise damage the pipe or lining. Such cuts shall be made at no cost to the Town.

b. Joint deflection of mechanical joint and Tyton joint pipe shall be as indicated on Standard Details and the Plans, unless otherwise approved by the Superintendent.

c. Special care shall be taken to ensure that the pipes are well bedded on a solid foundation in accordance with Detail 101.
Any defects due to settlement shall be made good by the Contractor at no expense to the Town. Bell holes shall be dug sufficiently large to ensure the making of proper joints.

d. Springing of pipe to replace any section will not be allowed, except by permission of the Superintendent.

e. Pipe fittings and valves shall be secured in place by concrete foundation or thrust blocks or by strapping as shown on the plans and in accordance with the Standard Details.

B. Joints

1. Mechanical Joints

a. Mechanical joints consist of rubber gaskets, cast iron gland rings, bolts, and hexagonal nuts. Prior to assembling joint, both pipe sections to be in contact with the gasket shall be cleared with a wire brush so as to obtain a clean, smooth surface free of rust and foreign materials.

b. Assemble joints in accordance with AWWA C111 and C600 and as specified herein. Clean with soapy water and lubricate contact surfaces with vegetable oil soap. Slip the gasket over the spigot end into the bell. Center the spigot end in the bell. Complete the joint by alternate tightening of proper number, size and length bolts 180 degrees apart with a torque wrench set between 50 and 60 foot pounds, so that the gland and face of the flange present parallel faces during the procedure. The first bolt to be tightened shall be at the bottom of joint. Second shall be at the top of the joint, etc.

c. Where satisfactory sealing of the joint is not attained at the maximum permissable torque, disassemble, reclean and reassemble the joint with a new gasket.

2. Push-on Joints

a. Push-on joints consist of a circular rubber gasket which fits into a specially designed bell or socket end of the pipe and over the spigot end of the pipe using the manufacturer's recommended lubricant. Tile

or grind the spigot on field cut pipe lengths to re-semble the pipe as manufactured so that the spigot end will slip into the socket intact without hindrance or gasket damage. Place an indentifying mark on pipe that is not furnished with a depth mark on the spigot to show the depth of the socket.

b. Assemble joints in accordance with AWWA C600 and as specified herein. Clean the inside of the socket and outside of the spigot and the pipes to be jointed to obtain clean, smooth surfaces free of foreign materials. Apply a thin film of gasket lubricant furnished by the joint manufacturer to the inside surface of the gasket and to the outside surface of the spigot. Enter the spigot into the socket. Complete the joint by forcing the spigot into the socket up to the depth mark, using equipment designed for the purpose.

C. Fittings and Valves

1. Install fittings, and valves where indicated on the plans. Set fittings and valves and join to pipe as hereinbefore specified. Where valves occur on the end of a pipeline, place a cast iron plug or blind flange and secure in the exposed bell before backfilling the trench.

2. Provide a valve box and extension stem where required for the following: nut operated valves; valves on which the operating mechanism is enclosed in a grease case; valves 16 inch and larger in diameter; valves with exposed gearing or operating mechanism; air valves.

3. Set valve box at right angle to the water main, centered and plumb over the operating nut of the valve extension stem with nut from three to four feet below top of cover with the box cover flush with the surface of the finished grade, or set to the elevation shown on the drawings. Support as required to maintain nut in position. Before installation, ascertain that valves are in proper working order. If valves are not operating properly, notify the Superintendent immediately. Backfill and compact under and around valve boxes to insure no vertical loads are transmitted to the valve operators.. The flange at the bottom of the bottom section shall rest upon bricks as shown on the Standard Detail.

D. Hydrants

1. Install fire hydrants where indicated on the Plans in accordance with the Standard Details. Set plumb at the elevation directed by the Superintendent. Place the steamer

outlet normal to the street line. Strap fire hydrant to main as shown on the Standard Details.

2. The hydrant shall be firmly set on a solid concrete block and a minimum of 1/3 cubic yard of granular bedding of SHA graduation #8 which shall extend to a point approximately 4 inches above the waste opening in accordance with the Standard Details.

3. Lay fire hydrant connections level, in the manner specified herinbefore for laying pipe.

E. Water House Connections

1. Provide water house connections from the water mains to property lines with one continuous piece of "K" copper pipe at the elevations indicated on the Plans, Standard Details, or directed by the Superintendent. Install corporation stops, curb stops and/or meter vaults where indicated. Mark the location of the end of the water connection pipe at the property line with a 2 x 4 timber, painted green, placed vertically from the bottom of the trench and extending two feet above grade.

2. Except where otherwise specified herein tapping of the water main and insertion of the corporation stops shall be performed by qualified personnel. No tapping for these services shall be performed prior to the testing and acceptance of the main.

   a. Provide a service saddle where tapping a three or four inch cast iron or ductile iron water pipe for a one or one and one-half inch corporation stop. Maintain a minimum of 18 inches from tap to the bell end of the pipe. After making the connection and completing the installation, open and leave open the corporation stop.

   b. Do not tap dry unless directed by the Superintendent. If so directed, make the tap as specified herein and leave the trench open at the tap until the water main has been placed in service and the taps have been inspected.

3. Install house connections with outside meters per Standard Details.

F. Corporation Stop for Chlorination Purposes

1. Provide one-inch corporation stop and coupling in water mains for chlorination purposes where directed by the Superintendent. The corporation stop shall be removed after testing and the contractor shall install a standard corporation stop threaded brass plug per AWWA C800.

G. Valve Vaults and Manholes

1. Provide valve vaults and manholes where indicated on the plans in accordance with Detail 102. Sanitary Sewer Manhole Frame/Cover. Do not complete to final grade until grading is complete and proper alignment is insured. Set frames on grade rings if required as indicated on the Standard Details. Space steps as indicated on the Standard Details and the Plans.

H. Buttresses, Anchorage & Harnessing

1. Provide buttresses, anchorages and harnessing where indicated on the plans or directed by the Superintendent in accordance with the Standard Details. The Superintendent will inspect and approve excavations before buttresses and anchorages are placed. The entire face of the excavation against which butresses will bear shall be firm bearing, flat and at proper angle to the pipe connections. The concrete shall be cured seven days between placing concrete and pressurizing mains.

I. Connections to Existing Lines

1. Before the start of construction, dig test pits on all connections to existing work. The Superintendent will examine the test pits and establish line and grade and determine material required at connections.

2. Notify the Superintendent at least three working days prior to proposed connection construction. Make connections at such time and in such manner as the Superintendent directs.

3. The Commissioners of Thurmont will notify the consumers and operate or have DPW personnel operate all valves necessary to shut off the mains. The Commissioners of Thurmont will make every reasonable effort to have tight shut offs, but does not warrant that the mains will be dry. Complete the connections with the greatest possible speed.

4. Certain information is shown on the drawings relative to existing pipe and other construction. This information was transferred from existing records and is deemed to be reliable but the Town does not warrant or guarantee that either the locations, the dimensions or the type of material are exactly as shown.

5. Water House Connection Renewals

a. Unless otherwise directed, utilize existing tap at main water line.

b. Where directed by the Superintendent, abandon the existing tap and retap the main water line pipe.

c. Furnishing material for and tapping main line water pipe shall be performed by experienced personnel.

# S P E C I F I C A T I O N S

## FOR CONSTRUCTION OF CURB, COMBINATION CURB & GUTTER USING SLIP FORM METHOD

SECTION 300

### 1. DESCRIPTION

This work shall consist of the construction of concrete curb, concrete combination curb and gutter, concrete monolithic median. All work shall be in accordance with these Specifications and in reasonably close conformity with the lines and grades shown on the Plans, Standards or established by the Engineer.

### 2. CONSTRUCTION REQUIREMENTS

Concrete curb, combination curb and gutter, and monolithic median may be constructed by either the slip-form or conventional fixed form method.

### 3. MATERIALS FOR SLIP-FORM METHOD

Concrete: 3000# Mix
Minimum six (6) bag cement
Washed natural sand

### 4. EXCAVATION

Excavation shall be made to the required depth and the subgrade shaped and adequately compacted at the required elevation. All soft and unsuitable material shall be removed and replaced with suitable material. A minimum of two (2) inch compacted crusher run, No. 6 stone shall be placed over subgrade of curb and gutter.

### 5. SLIP-FORM METHOD

Slip-form construction shall <u>not</u> be used when the concrete aggregate is gravel.

Slip-form equipment shall be approved by the Engineer and include the incorporation of automatic guidance controls to follow line and grade reference. The use of manual control on slip-form equipment is not permitted. Line and grade reference shall consist of taut lines or wire suspended from supports set in the subgrade or adjacent pavement. The references shall be at 25 ft. (8m) intervals on uniform grades and tangent sections. On vertical and horizontal curves, an additional intermediate support shall be set in the field to establish a reference line acceptable to the Engineer. The use of ski or shoe sensors reflecting variations in grade of existing roadway surface will not be permitted.

6. CONCRETE

The concrete shall be of such consistency that after extrusion it will maintain the shape of the barrier without support. The surface shall be free of surface pits larger than 3/16 inch (5mm) in diameter. The concrete shall require no further finishing other than light brushing with water only. Finishing with a brush application of grout will not be permitted.

If during the operation of the slip-form equipment, a tear occurs, it shall be repaired immediately. The repair shall be made in accordance with good concrete practices that are acceptable to the Engineer. It will be at the sole discretion of the Engineer as to whether the tear can be repaired or whether the areas will require removal and replacement.

Contraction joints shall be sawed or formed at 20ft. (6m) intervals in the barrier and footer. Each joint shall be a minimum of 2 inch (50mm) in depth and 1/8 inch (3mm) in width. Expansion joints will be required when shown on the Plans or as directed by the Engineer. However, sections of 10 ft. (3m) length may be constructed if necessary to make use of delivered concrete. At the terminus of any pour less than 20 ft. (6m), a bulkhead form shall be placed; and six #8 dowels, 2 ft. (0.6m) long, shall be placed through the bulkhead. No joint material is required.

Submitted to:

The Commissioners of Thurmont, Md.

Submitted by:

Marion W. Rice
Superintendent of Public Works

Approved by the Board of Commissioners of Thurmont, Md. on August 7, 1985

James F. Black

James F. Black, President of the Board

# SPECIFICATIONS

FOR

CONSTRUCTION

STREETS AND PARKING AREAS AND CURB-GUTTERS

Section 400

1. EXCAVATION & GRADING

Shall include stripping and stockpiling top soil and spreading of excess excavated materials. It shall also include the borrowing of materials, if needed.

2. MATERIALS

All materials used within the limits of streets or parking areas shall be subject to approval of the Superintendent, to determine their suitability for portions of the work in which they are placed.
Such tests, for approval, may consist of chemical or physical analysis to determine mechanical properties, bearing capacity, density, stability, pertinent to satisfactory performance of the work proposed.

a. The method for testing materials shall be in accordance with the requirements of the A.A.S.H.O. Designation T-99.

3. CONSTRUCTION METHODS

a. Top soil shall first be stripped for the entire width of the right-of-way, and borrow area if needed. Top soil shall be placed as directed for future use.

b. Rock too large to be incorporated in an eight inch thick layer of fill shall not be used. Layers of earth shall be compacted before next layer is placed.

c. No frozen material shall be placed in fills. Any frozen materials removed shall be placed on stockpile outside of construction limits.

d. A uniform procedure shall be followed in placing, spreading, compacting and shaping the materials. It shall be placed in horizontal layers, 8" thick, and each layer shall be carried across the full width of the fill.

e. A smooth grade having an adequate crown shall be maintained to provide good drainage at all times.

f. The sub-grade shall be finished to neat and regular lines conforming to the typical cross section. Any rock or ledge encountered in the roadbed excavation, shall be removed to a depth of nine inches below proposed sub-grade and two feet back of curb line and backfilled with approved materials.

g. Compaction shall be accomplished with a tandem or three wheeled roller of not less than ten tons, or a sheep-foot roller two hundred P.S.I. contact surface pressure, as directed by Superintendent.

h. All roads, parking areas shall be placed to sub-grade as shown on grading plans. Sub-grade shall have a tolerance of one inch within the road or parking area right-of-way.

i. There shall be grade stakes set every twenty-five feet and finish grade marked on these stakes. Stakes to be 30" x 2" x 1" and all station hubs to be 2" x 2" x 12".

4. SURFACE TREATMENT OF ROADS - PARKING AREAS

No types of surface treatment shall be placed until sub-grade has been approved by the Superintendent.

5. TYPES OF SURFACE TREATMENT APPROVED

a. Bituminous Concrete (Blacktop)

Shall consist of asphalt cement, fine aggregate and course aggregate, mixed in accordance to Maryland State Road specifications.

Course aggregate used in the preparation of SN-ST bands must be crushed stone, crushed gravel. When crushed gravel is used, at least 75% of the particles must be crushed.

Fine aggregate for bands ST-SN shall be a combination of one or more crushed aggregates with silica sand. The crushed portion shall comprise 60% - 80% of the total mix in band ST or 65% - 85% of the total mix in band SN. The remainder of these mixtures shall be silica sand.

b. Bituminous Concrete Application

After sub-grade has been approved by Superintendent, there shall then be placed three inches (3") of BI base course mix aggregate, and left standing for 24 hours, after which there shall be placed a two inch (2") SN surface course mix aggregate.

All aggregate shall be rolled with a minimum 10 ton two steel wheel rollers. The SN surface course shall be rolled to within one-half inch (1/2") below top of gutter. The final one inch (1") layer ST Bituminous concrete shall be constructed one (1) year from date or approved time by Superintendent, if such is to be constructed across utility ditches. A prime or tack coat shall be applied before placing the final one inch (1") layer of Bituminous concrete. The tack shall be applied by motor-driven pressure distributor, and shall be applied uniformly at a rate .02 gallons per square yard of surface area.

c. Curb-Gutter

Curb-gutter shall be constructed to the line, grades and dimensions shown on the plans and in accordance with these specifications.

1. Excavation

All necessary excavation shall be completed and the sub-grade properly shaped and adequately compacted at the required elevation. A minimum of two inches (2") of compacted CR #6 stone shall be placed in sub-grade.

2. Forms

Forms shall be of steel of an approved design, securely fastened and braced. They shall be not less than 10 feet long. Curved steel or wood forms shall be used along curves where the radius of the curb face is less than 200 feet. Forms shall be placed that will produce a concrete curb and gutter that will meet the required tolerence of deviations not to exceed one quarter (1/4) inch in 10 feet in either grade or alignment. Before concrete is placed against the forms, they shall be thoroughly cleaned and coated with form release compound each time they are used. Concrete Curb-Gutter shall be cured by using hand sprayer applying a colorless curing compound, at a rate of not less than (0.034) gallons per square yard.

3. Concrete shall be six (6) bag mix silica sand Portland Cement Type 1.

d. Side Walk

1. Sub-grade

The sub-grade shall be compacted after which it shall be accurately trimmed to proper shape and grade.

Where plans do not show section or thickness of the side walk, it shall be four (4) inches thick. The side shall be layed off in five (5) feet blocks and have an expansion joint every thirty-five (35) feet. A colorless curing compound shall be sprayed over entire concrete side walk area.

e. Parking Lot Area

1. Plan

A plan must be prepared accurately using a scale of one inch (1") = ten feet (10') on a sheet of drafting paper size 18" x 24". Plan shall show parking lot in reference to property lines. Plans shall also show adjacent property owners. Plans shall show existing and proposed elevations and contours. All storm water drainage must be shown including any piping that must be installed.

2. Surface Treatment

Grading and surface treatment shall be constructed in accordance with street grading and surface treating specifications.

3. Alternate Surface Treating

As shown in Detail No. 402 may be constructed, if sub-grade meets compaction tests.

4. Bituminous Concrete Curb

Eight inch (8") curb shall be installed using special curbing bituminous concrete mix and construct with motorized curbing machine.

5. Painting

Parking lots shall be painted with four inch (4") white lines showing each space.

# BITUMINOUS CONCRETE SPECIFICATION B

## Construction Methods

### 1. Pavers

Unless otherwise permitted by the Engineer, mixtures shall be spread by means of a mechanical self-powered paver capable of spreading the mixture true to line, grade and crown set by the Engineer. Pavers shall be equipped with hoppers and distributing screws to place the mixture uniformly in front of adjustable screeds. The mixture shall be dumped in the center of the hoppers and care exercised to avoid overloading and slopping over of the mixture upon the base. Pavers shall be operated at a speed such that the paving mixture is placed at a uniform, continuous rate. They shall be equipped with a quick and efficient steering device. In base widening, an approved machine capable of spreading the material spilled onto the paved portions of the roadway after the machine has passed, shall immediately be broomed onto the widening. On traveled roads, traffic shall be adequately maintained.

Unless operating on fixed side forms, pavers shall employ mechanical devices such as equalizing runners, straightedge runners, evener arms, or other compensating devices to adjust the grade and confine the edges of the mixtures to true lines without the use of stationary side forms. They shall be capable of spreading the mixtures with segregation, in the thickness of from three-quarters (3/4) to at least three (3) inches, to a width of not less than twelve (12) feet, and of adjustment to spread the mixture in strips of less than twelve (12) feet in width, in steps of one (1) foot or less, to a minimum width of seven (7) feet.

The term "screed" includes any "strike-off" device operated by cutting, crowding or other practical action which is effective on the mixtures at workable temperatures without tearing shoving or gouging and which produces a finished surface of the evenness and texture specified. The screed shall be adjustable to the required elevation and shall have an indicating level attached.

### 2. Controls for Pavers

Automatic Controls

Unless otherwise specified, all bituminous concrete paving machines shall be equipped with automatic grade and cross slope control devices which will cause the paver to follow a predetermined profile grade and maintain any desired cross slope. The paver shall be equipped with a sensing device to

actuate the controls regulating the screed angle of attack in order to make it pave to the predetermined profile and it shall be possible to use such sensors on either or both sides of the paver. It shall be equipped with some form of slope sensing pendulum or artificial horizon as a reference from which it shall automatically control the cross slope and maintain it at any predetermined amount. The paver shall also be equipped with gauges to indicate the degree of compliance with or the deviation from the required profile grade and cross slope. It shall also provide for manual control as noted elsewhere herein, in addition to automatic operation of either or both of the profile grade and the cross slope controls and while operating automatically it shall be possible to manually override the automatic controls.

Resurfacing and Second Stage Construction

(1) For wedge and/or leveling courses when applied to:

a. Non-rigid pavement
String line and grade must be set on each side of the roadway with fixed controls not to exceed 25' longitudinally and 25' transversely between grade lines.

b. Rigid Pavement
String line and grade with fixed controls need only be on each side of the pavement regardless of the pavement width.

(2) Finished surface of wedge and/or leveling courses must not deviate more than ½" from the grade thus established.

(3) Line, but no grade will be required for base, binder and surface courses.

# ROUND TAPERED ALUMINUM POLES

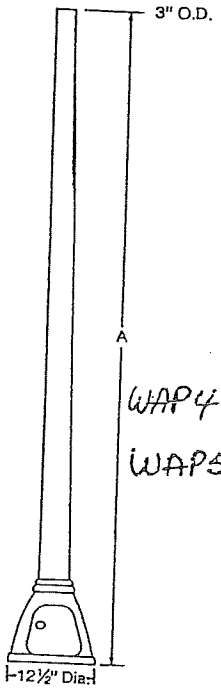


Series PA4000 with Pedestal Base

## Ordering Information
## Series PA4000

| Catalog Number | A Pole Height —Ft. | Shaft Cross Section —In. Dia. | Shaft Wall —In. | Maximum Effective Projected Area—Sq. Ft. Base Wind Velocity—M.P.H. 70 | 77 | 90 | 100 |
|---|---|---|---|---|---|---|---|
| | | | | Gust Wind Velocity—M.P.H 91 | 100 | 117 | 130 |
| PA4000 | 10 | 3x4 | .125 | 9.3 | 7.5 | 5.1 | 3.9 |
| PA4001 | 12 | 3x4 | .125 | 7.4 | 5.8 | 3.8 | 2.8 |
| PA4002 | 14 | 3x4 | .125 | 5.9 | 4.6 | 2.8 | 1.9 |
| PA4003 | 19 | 3x5 | .125 | 5.6 | 4.1 | 2.2. | 1.2 |
| PA4004 | 24 | 3x5 | .188 | 3.0 | 1.8 | 0.3 | 0.0 |

WAP4

WAP5

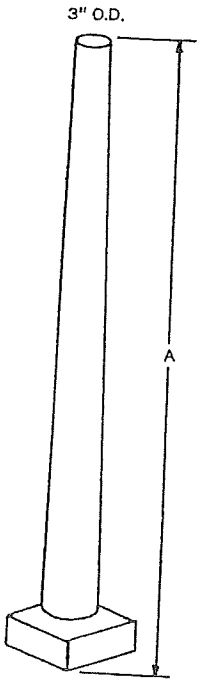


Series PA4100

## Series PA4100

| Catalog Number | A Pole Height —Ft. | Shaft Cross Section —In. Dia. | Shaft Wall —In. | Maximum Effective Projected Area—Sq. Ft. Base Wind Velocity—M.P.H. 70 | 77 | 90 | 100 |
|---|---|---|---|---|---|---|---|
| | | | | Gust Wind Velocity—M.P.H 91 | 100 | 117 | 130 |
| PA4100 | 10 | 3x4 | .125 | 5.8 | 5.8 | 4.4 | 3.5 |
| PA4101 | 12 | 3x4 | .125 | 6.4 | 6.4 | 5.0 | 4.0 |
| PA4102 | 14 | 3x4 | .125 | 5.2 | 5.2 | 3.9 | 3.2 |
| PA4106 | 16 | 3x4 | .125 | 4.1 | 4.1 | 3.2 | 2.5 |
| PA4105 | 18 | 3x5 | .125 | 3.4 | 3.4 | 2.6 | 2.0 |
| PA4103 | 20 | 3x5 | .125 | 4.5 | 4.5 | 3.4 | 2.7 |

## Additional Ordering Information:

Before making pole selection refer to page 7 for explanation of wind loading and pole selection procedure.

Finish—Brushed aluminum.

Base—Series PA4000—Cast aluminum pedestal base. Access door opening 7½" x 5¾" x 7⅛." Anchor bolt nuts are concealed in base.

Modifications—See Modification Table on page 2.

A variety of pole-top mounting brackets are available for Series PA5100 poles. Contact factory for details and dimensions.

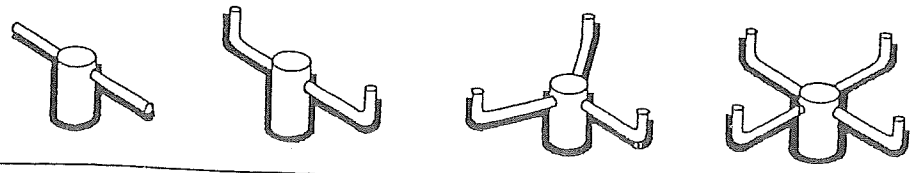

# STREET LIGHTING

## A. PLAN

A street lighting plan shall be prepared and submitted showing location of each luminaire, the voltage and each circuit.

## B. LUMINAIRES

Street light luminaires shall be placed as close to back of curb as possible and shall be spaced at a distance not to exceed 120 feet. Luminaires shall be installed as close as possible to property lines.

Luminaires shall be 100 watt high pressure sodium type having a 120 volt regulated output ballast. They shall be equal to Cooper Lighting No. TW1212129PBK lawnaire. Other approved manufacturers are Westinghouse and General Electric Compaines. Luminaires shall consist of a cast aluminum base with an access door and acrylic plastic refractor, type III distribution, hinged aluminum canopy. Color canopy shall be specified. Luminaire shall have a prewired terminal block. Luminaires shall have a 120 volt photo-control and receptacle installed on canopy. Base of luminaires shall accept 3" O.D. pipe and shall be furnished with a 100 watt high pressure sodium lamp.

## C. LUMINAIRE POST

Shall be round tapered aluminum .125 nominal wall thickness. Posts shall have a transformer base equipped with mounting bolts and nuts. Transformer base shall have a removable bolted access door. Pole shall be 3" O.D. at top and a height of 14 feet from sidewalk. Equal to McGraw-Edison Company #WAP-5-14.

## D. UNDERGROUND WIRING

Electrical conductors shall be 600 volt, 3 stranded insulated, #4 aluminum conductor triplexed together, with one of the three conductors having an insulation colored yellow to identify the neutral. Cables shall be placed in 1¼" PVC conduit continuous from one luminaire base to the other base. Contractor shall use ten (10) foot or twenty (20) foot lengths of conduit using solvent weld connections or use the 1¼" cable-in-duct system, manufactured by Intergal Corporation or approved equal. Contractor shall provide a wiring diagram showing how he proposes to make connections to the luminaires and provide electrical service. Contractor shall test all circuits to prove that there are no faults. No splicing shall be approved in any of the circuits, all connections shall be made at base of luminaires, or approved connection boxes. 1¼" PVC conduit shall have a minimum wall thickness of 0.150+/-0.010, schedule 40. (See plan 409)

# SPECIFICATIONS

## FOR STREET & STRUCTURAL BACKFILL & COMPACTION

Section 450

BACKFILL

1. General:

   a. Do not place, spread or compact fill material while it is frozen or thawing or place upon or adjacent to frozen or thawing ground or during unfavorable weather conditions. When the work is interrupted by rain, fill operations shall not be resumed until field tests indicate that the moisture content and density of the fill are within the limits specified. Any compacted layer which has been frozen shall be removed before the next layer is placed upon it.

   b. Moisture content of fill material shall be within two percent of the optimum for the material as determined by AASHTO T99, Method A. Prior to commencing compaction, fills shall be brought to specified water content by either aerating the material if it is too wet, or spraying the material with water if it is too dry. Thoroughly mix each lift before compaction to assure uniform distribution of water content. Distribute rocks of permissible sizes through the fill material and fill and compact to eliminate all voids.

2. Preparation:

   a. Before depositing fills, remove all vegative matter, mud, muck and otherwise unsuitable soils from the surfaces upon which fill materials are to be placed and fill irregularities and cavities.

   b. Completely fill boring voids and test pit excavations within the limits of excavation with sand, lean concrete or crushed stone up to the level of the proposed subgrade, as directed by the Engineer.

3. Placing Fill Material for Structural Fills and Embankments:

   a. Compact the surface upon which the fill material is to be deposited to the density specified hereinafter for compaction of fill.

   b. Where embankments are made on hillsides or slopes, step or bank the slope of the original ground upon which the fill is to be placed when so directed by the Engineer.

   c. Place fill material in uniform lifts of not more than eight inches in uncompacted thickness. Spread each layer uniformly and evenly. Perform compaction using compacting rollers, pneumatic or vibratory compactors or other equipment and methods approved by the Engineer. Jetting or puddling of backfill will not be allowed without permission of the Engineer.

   d. Compact each eight inch layer to not less than the following percents of maximum densities at a moisture content within two per-

cent optimum for the material as determined by the listed AASHTO method.

1. Under Town of Thurmont Flexible Pavement: 95 percent except for top foot which shall 100 percent per AASHTO T99.

2. In areas other than existing paved street rights-of-way, future street rights-of-way or in any traveled roadway, from a point two feet above the top of the pipe to the bottom of the topsoil, the backfill shall be placed in one foot lifts and solidly compacted by the use of a rubber tired or vibratory roller, or other mechanical device. The density of this backfill shall be not less than 90 percent per AASHTO T99.

e. Continue filling operation until the fill has been brought to the finished slopes and grades shown on the Contract Drawings, making proper allowances for thickness of topsoil, pavement slabs. Construct fill so that surface will be sloped to drain at all times and deposit fill so as to pervent excessive moisture accumulation from rain water.

f. Compaction by rollers or heavy equipment will not be permitted within a five foot strip adjacent to structures.

4. Placing Trench Backfill:

a. Placing trench backfill shall conform to requirements specified hereinbefore for placing structural fills and embankments, modified as follows.

b. Place granular bedding and haunching in accordance with the Standard Details.

c. Compact up to two feet above top of pipe by mechanical tampers in maximum six inch layers.

d. Complete backfill and compaction in not more than one foot lifts, utilizing such compaction equipment as will not damage the pipe and pipe joints. Pipe and pipe joints damaged by the Contractor's operations shall be removed and replaced at no cost to the Town.

e. In new subdivision work where water and sewer house connections are to be placed in the same tranch, backfill above the sewer house connection as hereinbefore specified up to a point four feet below proposed finished grade. Provide temporary backfill above this point to the surface until laying of water house connection is commenced.

At this time, reexcavate as required to lay water line and compact as hereinbefore specified.

g. Do not backfill around pipe, connections or fittings until measurements and locations are completed by the Engineer or Inspector.

FINISH GRADING

1. Perform grading operations so that the excavation will be well drained at all times. Maintain drainage ditches and keep them open and free from soil, debris and leaves until final acceptance of the work. Finish all grading on neat, regular lines conforming to the sections, lines, grades and contours shown on the Plans or if not shown, in accordance with the criteria set forth hereinafter. Perform grading work in proper sequence with all other associated operations.

2. Structures and pavement; bring finished subgrade to the elevation as shown on the drawings. Bring entire area to the finished subgrade elevation before excavating for footings.

3. Grading criteria for structures greater than 20 feet in maximum dimension; perform grading in accordance with the following requirements is not indicated otherwise in the Contract Documents.

   a. Place fill at a minimum slope of two percent for a minimum of ten feet beyond the exterior wall or exterior face of the structure. From the edge of the ten foot extension, slope to existing grade at a maximum slope of 1:2.5.

4. Uniformly grade all areas disturbed by the Project, at trench locations excavated and fill areas and adjacent transition areas so that finished surfaces are at the proposed grade or are approximately at preexisting grades, adjusted as required to provide positive drainage.

MATERIAL STORAGE

1. Deposit excess excavated material and unsuitable material offsite, as directed by Engineer. Topsoil shall be stockpiled in a location approved by the Engineer.

DEWATERING AND DRAINAGE

1. If water is encountered in excavation, provide pumps of sufficient capacity to remove the water while the excavations are being made and until the concrete footings have been poured, the foundation walls or other structures erected up to grade or until the excavation has been backfilled. Do not allow sediment laden water to flow into any watercourse or drainageway or overland without first filtering it through an approved desilting device. Use of woven and non-woven fiber material will be allowed when approved by the Engineer.

2. Provide all necessary temporary surface drainage and keep the same operating to the satisfaction of the Engineer until permanent drainage or finish grading has been compelted. Do not allow damming or ponding of water in gutters or storm drains.

## RESTORATION OF SURFACE FACILITIES

1. The Contractor shall restore and restabilize surface features and facilities damaged or destroyed during construction to at least the condition existing before construction.

## MEASUREMENT AND PAYMENT

1. Excavation and backfill for utility structures and trench excavation and backfill:

   a. Excavation and backfill for utility structures and trench excavation and backfill with approved material excavated from the bottom of the trench or the lower level of the granular bedding where indicated, will not be measured separately for payment but the cost therof will be included in the unit prices bid for the particular utility facility.

   b. Excavation and backfill for utility structures and trench excavation and backfill in excess of the limits described above will not be paid for except as authorized in writing by the Engineer.

2. Borrow trench backfill, borrow structural fill and borrow embankment:

   a. Borrow trench backfill, borrow structural fill and borrow embankment will be measured by the compacted volume in cubic yards actually placed, as determined from the locations indicated on the Plans and indicated in the Special Provisions.

      Payment for borrow structural fill, borrow embankment and borrow trench backfill will made for the quantities measured for the type required at the unit prices per cubic yard listed in the Bid Schedule.

   b. Payment will include disposal off-site of unsuitable material.

3. Granular Bedding:

   a. Granular bedding for pipe and structures will not be measured for payment but the cost thereof shall be included in the unit price per linear foot in the bid schedule for pipe, specified under other sections, and in the unit price for structures where required.

4. Granular backfill below subgrade:

   a. Excavation of unsuitable material and replacement with granular backfill below subgrade at the direction of the Engineer, will be measured by the cubic yard actually replaced, measured by the volumes by Average End method in the trench pay width as shown on Standard Detail.

      Payment will be made for the quantities measured at the fixed contingent unit price per cubic yard listed in the bid schedule.

   b. Payment will include disposal off-site of unsuitable

5. Sheeting left in place:

   a. Sheeting left in place at the direction of the Engineer will be measured by the thousand board foot of sheeting actually placed, regardless of material, and payment will be made for the quantity measured at the fixed contingent unit price per MBF listed in the Bid Schedule.

      1. Payment will include cost of additional granular bedding material required due to the use of sheeting.

6. Test pits:

   a. Test pits in the numbers, at the locations and the limits directed by the Engineer, shall be measured by the cubic yard of excavated material removed. Those portions of test pits not backfilled but utilized as trench excavation shall be included in pipe prices bid.

      Payment will be made for the quantities measured at the fixed contingent unit prices per cubic yard listed in the Bid Schedule.

   b. Payment will include backfill and material as specified hereinbefore.

7. Rock Excavation:

   a. Rock excavation for pipe and structures will be measured by the cubic yard excavated as shown or directed, measured by the Volumes by Average End Areas method in the trench pay width for pipe and two feet from the outside walls of all structures as shown on Standard Details.

      Payment will be made for the quantities measured at the fixed contingent unit prices per cubic yard listed in the Bid Schedule.

   b. Payment will include disposal off-site of all rock excavated plus the backfill and material as specified hereinbefore.

8. Non-payment items:

   a. The following items of work will not be measured for payment but will be considered as incidental to the Contract:

      1. Dewatering, watering.

      2. Finish grading.

      3. Preparation of subgrade.

      4. Compaction tests as required by the Engineer.

      5. Sheeting and shoring, for the convenience of the Contractor or for compliance to the safety regulations.

6. Blasting.

7. Removal of excess material.

8. Granular base under slabs and pipe bedding.

9. Placing structural fill and embankment using suitable materials available on site.

Submitted to:

The Commissioners of Thurmont, Md.

Submitted by:

Marion W. Rice
Superintendent of Public Works

September 29, 1986

Approved by the Board of Commissioners of Thurmont, Md. - September 29, 1986

James F. Black

James F. Black, Pres. of the Board

STREET EXCAVATION & REPAIR PERMIT

FOR

WATER & SEWER LATERALS

OWNER/APPLICANT: _____

ADDRESS: _____

_____

WATER LINE ( ) SEWER LINE ( )

APPORX. LENGTH OF LINE _____FT.

STREET OWNERSHIP: MUNICIPAL ( ) STATE HIGHWAY ( )

TYPE OF SECURITY: MUNICIPAL STREET - $ 500.00 ( )

STATE HIGHWAY - -$ 1500.00 ( ) INC. RTS. 806,550 & 77

THE UNDERSIGNED APPLICANT HEREBY AGREES THAT THE COMMISSIONERS OF THURMONT HAVE THE RIGHT TO APPLY ANY AMOUNT OF THE SECURITY NECESSARY TO MAKE TEMPORARY OR PERMANENT STREET REPAIRS, IF FOR ANY REASON, APPLICANT FAILS TO COMPLETE HIS OBLIGATION IN THE DESIGNATED TIME LIMIT.

WORK TO BEGIN: _____

TEMPORARY PAVING, COLD MIX BLACKTOP-NO STONES,

TO BE COMPLETED: _____

PERMANENT PAVING TO BE COMPLETED: _____

ALL WORK TO BE COMPLETED IN ACCORDNACE WITH THE TOWN OF THURMONT AND STATE HIGHWAY ADMINISTRATION CONSTRUCTION SPECIFICATIONS.

OWNER/APPLICANT: _____

## STREET REPAIR OVER DITCHES

1. TOWN MADE THE INSTALLATION OF WATER & SEWER LATERALS, FROM THE MAIN TO THE PROPORTY LINES, THE RESPONSIBILITY OF THE PROPERTY OWNER.
2. ANY CONTRACTOR CAN DO THE WORK, NO REGISTRATION NEEDED TO DO PLUMBING WORK.
3. MOST CONTRACTORS INSTALL STREET REPAIRS PROPERLY, BUT SOME DO NOT. WE CAN NOT GET THEM BACK TO COMPLETE THE WORK.
4. IF WE CAN NOT GET CONTRACTORS BACK TO COMPLETE THE WORK, THEN THE TOWN HAS TO MAKE THE REPAIRS WITH NO GUARANTEE OF REIMBURSEMENT.
5. IF DITCHES CROSS STATE HIGHWAY PROPERTY, WE ARE RESPONSIBLE SINCE WE HAVE THE PERMIT.
6. THIS SITUATION HAS OCCURRED TWICE OUT OF THE LAST THREE INSTALLATIONS.

## SUGGESTIONS

1. THE BUILDER OR PROPERTY OWNER OBTAIN A PERMIT PRIOR TO ANY CONSTRUCTION.
2. DEPOSIT CERTIFIED CHECK PAYABLE TO THE COMMISSIONERS OF THURMONT, TO COVER REPAIRS, IF NECESSARY, FOR ANY REPLACEMENT. (PERMANENT REPLACEMENT BY QUALIFIED CONTRACTOR)
3. DEPOSIT: $ 500.00 FOR MUNICIPAL STREET; $ 1,500.00 FOR STATE ROADS AND ROUTES 806,77 AND 550.
4. TIME LIMIT FOR PERMANENT REPAIRS OR TOWN WILL HIRE CONTRACTOR TO COMPLETE. (CHANGEABLE DUE TO WEATHER CONDITIONS)

APPROVED BY THE COMMISSIONERS OF THURMONT, MARYLAND, FEBRUARY 4, 1987 -

BY: James F. Black

James F. Black, Pres. of the Board

STANDARD SPECIFICATIONS

SECTION 500

SEEDING AND SODDING

1. General

a. Description:

This section includes seeding and sodding to the limits shown as required for restoration and restabilization of disturbed areas, and as directed by the Engineer, including preparation of seed and sod bed, fertilizer, lime and mulch, in accordance with the Contract Documents.

b. Submittals

1. Submit certificates of compliance before delivery of materials as specified .

a. Topsoil
b. Seed
c. Sod
d. Fertilizer
e. Lime
f. Mulch

c. Construction Criteria

1. Unless otherwise indicated provide sod on those disturbed areas which supported a previously established stand of turf; on slopes 3:1 and steeper; and where directed by the Engineer. Provide seeding on all other disturbed and filled areas.

d. Reference Documents

1. The Contractor shall obtain and maintain on the site at all times a copy of the requirements of Maryland Turf Grass Law and Regulations, Publication No. 41, available from the Seed and Turf Lab, Maryland Department of Agriculture, College Park, Maryland 20742.

II. Materials

a. Topsoil

1. General Requirements

a. Topsoil shall consist of fertile, agricultural soil capable of sustaining vigorous plant growth. It shall contain not less than 1-1/2 percent organic matter as determined by MSHA standard method of testing and shall have a ph value between 6.0 and 7.6.

b. Topsoil shall be free of roots, rubbish and other objectionable materials such as Bermuda Grass, Johnsongrass, Canada Thistle, Quack Grass, Poison Ivy and kindred roots and any material harmful to plant growth. Topsoil shall provide sufficient pore space to permit adequate root penetration.

c. Topsoil shall meet the following analysis as determined by the MSHA standard hydrometer test. Sand, silt and clay are as defined in AASHTO M146.

| Min Percent | Max. Percent |
|---|---|
| Sand 30% | 50% |
| Silt 30% | 50% |
| Clay 5% | 20% |
| Humus 3% | 5% |

d. Special purpose topsoil shall be used where indicated. General purpose topsoil shall be used in all other areas.

2. Special Purpose Topsoil

a. Special purpose topsoil shall meet the requirements listed above with the following graduation:

| Sieve | Min. Percent Passing |
|---|---|
| 2" | 100% |
| No. 4 | 90% |
| No.10 | 80% |

b. Special purpose topsoil shall be capable of hand spreading.

3. General Purpose Topsoil

a. General purpose topsoil shall meet the general requirements set forth above and shall contain no stones greater than 1-1/2 inches in their greatest dimension.

4. Materials available on site which meet the specified requirements may be utilized with the permission of the Engineer.

b. Seed

1. Seed shall be supervised and mixed by the Maryland Department of Agriculture and shall conform to requirements of Maryland Turf Grass Law and Regulations, Publication No. 41.

2. Supply the following for improved areas which will be mowed regularly, and are dry and semi shady.

a. Mix

Kentucky Bluegrasses
20-30% Certified Merion
20-30% Certified Kenblue or South Dakota Certified
10-40% Certified Adelphi, Baron Birks or Pennstar
Creeping Red Fescue
10-50% Certified Pennlawn or Jamestown

b. Seeding Rate: Sow mixture at 140 pounds per acre, or three pounds per 1,000 square feet between March 1 and May 31 and between August 15 and October 31.

c. Premixed Certified seed mixture labeled "Maryland Certified 30-30-30-10 Seed Mixture" will be acceptable.

3. Supply the following for slope areas not to be mowed (or mowed infrequently).

a. Mix

Same as 2a above with Crown Vetch or Lovegrass added to this mixture.

b. Seeding Rate: sow mixture at the rate listed in 2a above with an additional ten (10) pounds of Crown Vetch, or four (4) pounds of Lovegrass per acre of area seeded.

4. Supply the following for improved areas which will be mowed regularly and are dry, in heavy shade:

a. Mix

Kentucky Bluegrasses
20% Certified Merion
30% Certified Kenblue or South Dakota, Adelphi, Baron, Birka or Pennstar(any combination thereof).
Creeping Red Fescue
50% Certified Pennlawn or Jamestown

b. Seeding Rate: sow mixture at 140 pounds per acre or three pounds per 1,000 square feet between March 1 and May 31 and between August 15 and October 31.

5. Supply the following for unimproved areas not to be mowed (or mowed infrequently) and are drought-prone:

a. Mix

Tall Fescue - 80-90% Certified Kentucky 31
Kentucky Bluegrass: 10-20% Certified Kenblue, South Dakota Certified or common.

b. Seeding Rate: sow mixture at 215 pounds per acre or five pounds per 1,000 square feet between March 1 and May 31 and between August 15 and October 31.

6. Supply the following for poorly drained areas and areas that are subject to frequent flooding: or for temporary grass stabilization.

   a. Mix

      Tall Fescue: 75% Certified Kentucky 31
      Reed Canarygrass: 25% (certified not required)

   b. Seeding Rate: sow mixture at sixty pounds per acre or 1.5 pounds per 1,000 square feet between March 1 and May 15 and between August 15 and October 31.

c. Sod

   1. General: sod shdl be certified or approved grade as designated by the Maryland Department of Agriculture and shall conform to requirement of Maryland Turf Grass Law and Regulations, Publication No. 41. Sod shall be machine cut at a uniform thickness of 3/4 inch +/- 1/4 inch, excluding top growth and thatch. Each individual sod piece shall be strong enough to support its own weight when lifted by the ends. Broken pads, irregularly shaped pieces and torn or uneven ends will not be acceptable.

   2. Sod replacing previously established stand of turf shall be similar in kind to that which existed prior to construction.

   3. Sod placed where no grass existed prior to construction or replacing a lawn consisting mainly of coarse textured grass without a dominate species shall be as follows:

      a. "Maryland State Approved" multi-use turf sod

         Tall Fescue: 90-100% certified Kentucky 31
         Kentucky Bluegrasses: 0-10% certified Kenblue(Kentucky origin) Certified Merion, or South Dakota Certified.

   4. Sod replacing a lawn consisting mainly of fine textured grass without a dominant species shall be as follows:

      a. Maryland Certified 30-30-30-10 sod.

d. Fertilizer

   1. Fertilizer shall be uniform in composition, free flowing and delivered to the site fully labeled according to applicable state fertilizer laws and shall bear the name, trade name or trademark and warranty of the producer.

   2. The Contractor may submit soil samples to an approved soils test-

ing laboratory for fertilizing recommendations. Recommendations shall be submitted to and approved by the Engineer before implementation.

3. Otherwise, fertilize at the following rates:

   a. Temporary Seeding: Supply 10-20-10 or equivalent at the rate of 600 pounds per acre or fifteen (15) pounds per 1,000 square feet.

   b. Permanent Seeding: Supply 600 pounds of 0-20-20 per acre with limestone. Immediately prior to seeding supply 400 pounds of 38-0-0 ureaform and 500 pounds of 10-20-20 or equivalent per acre.

   c. Sodding: Supply fifteen (15) pounds of 10-20-10 per 1,000 square feet. Immediately prior to sod installation, supply 3.5 pounds of slow release nitrogen per 1,000 square feet. Slow release nitrogen shall be approximately 1/3 immediately available and 2/3 water insoluble, such as urea formaldehyde or isobutyledene urea.

e. Lime

1. Lime shall be ground limestone containing at least fifty (50) percent total oxides (calcium oxide plus magnesium oxide). Limestone shall be ground to such a fineness that at least fifty (50) percent will pass through a 100 mesh sieve and 98 percent will pass through a 20 mesh sieve.

2. S upply seventy (70) pounds per 1,000 square feet (1-1/2 tons per acre) on sandy and silty soils or 100 pounds per 1,000 square ft. (2.3 tons per acre) on clay or clay loam soils.

f. Mulch

1. Mulch for protection of permanent seeding shall conform to the following requirements:

   a. Straw - clean, weed free, unrotted straw (not less than 48 hours after mowing) applied at a rate of not less than 70 lbs. per 1,000 square feet (1½ tons per acre) and shall be anchored with: mulch anchoring tool (flat slopes), mulch nettings, cut back and emulsified asphalt ( five gallons per 1,000 square feet), curasal ah (five gallons per 1,000 square feet), Tera Tack II (20 gallons per 1,000 square feet), or Petroset (manufacturer's recommendations). On slopes eight (8) feet or more high, the rate of liquid binders shall be increased by 60%.

   b. Mulch nettings, jute or excelsor blanket.

2. Mulch utilized as temporary protection and stabilization shall

conform to the above materials requirements. Rate of application shall be as directed by the Engineer. Stone much will be permitted at the option of the Engineer.

3. Use either straw of cellulose wood fiber for landscaping.

III. Execution

a. Permanent Seeding:

1. Harrow, disc, or otherwise loosen subsoil to a depth of four (4) inches. Spread topsoil evenly over prepared subsoil to the following depths:

a. Slopes 3:1 or steeper; two inches after compaction.

b. Slopes flatted than 3:1, four inches after compaction.

2. Remove objectionable material such as tones, 1½ inches or larger, clods, brush, roots and trash from the top four inches of soil.

3. Apply lime and fertilizer at the rates specified in "materials", and thoroughly mix into the top six inches. Scarify the area and rake until the surface is leveled to provide a maximum of two inches in variation, and the soil is friable and of uniform fine texture.

4. Immediately prior to seeding apply additional fertilizer at the rates specified in "materials", and work into the top two inches of the soil.

5. Perform harrowing, discing, scarifying and raking on the contour of slopes steeper than 3:1.

6. Moisten seedbed during periods of high temperatures and when directed by the Engineer.

7. Apply seed mixture uniformly with mechanical power driven seeders, mechanical cyclone hand seeders or hydroseeding equipment. (Slurry for hydroseeder may contain seed and fertilizer only).

8. Culipack or roll one inch into soil in floodplain areas. Rake, roll or drag the seedbed in all other areas, if hydroseeder or cyclone seeder is used.

9. Apply mulch, immediately after seeding, at the rates specified in "materials".

10. Anchor mulch as specified

b. Temporary Seeding

1. Loosen top two inches of seedbed.

2. Apply lime and fertilizer at the rates specified in "Materials".

3. Moisten seedbed during periods of high temperature and when directed by the Engineer.

4. Apply seed mixture uniformly with mechanical power drawn seeders, mechanical cyclone hand seeders or hydroseeding equipment. (Slurry for hydroseeder may contain seed and fertilizer only).

5. Culipack or roll seed one inch into soil in floodplain areas. Rake, or drag seedbed in all other areas, if hydroseeder or cyclone seeder is used.

6. Apply mulch, immediately after seeding, at the rates specified in "materials".

7. Anchor mulch as specified.

c. Sodding

1. Harrow, disc or otherwise loosen subsoil to a depth of five inches. Spread topsoil evenly over prepared subsoil in the following depths.

   a. Slopes 3:1 or steeper, two inches after compaction.

   b. Slopes flatter than 3:1, four inches after compaction.

2. Remove objectionable material such as stones, 1½ inches or larger, clods, brush, roots and trash from top four inches of soil.

3. Apply lime and fertilizer at the rates specified in "materials" and thoroughly mix into the full depth of the topsoil. Scarify the area and rake until the surface is leveled to provide a maximum of two inches in variation, and the soil is friable and of uniform fine texture.

4. Immediately prior to sodding apply additional fertilizer at the rates specified in "materials" and work into the top two inches of topsoil.

5. Perform harrowing, discing, scarifying and raking on the contour of slopes steeper than 3:1.

6. Deliver sod to the site within twenty-four (24) hours after being cut and install sod within thirty-six (36) hours after being cut.

7. During wet weather, dry sod sufficiently to prevent tearing during handling and placing. During dry weather, water sod sufficiently before lifting to insure its vitality and to prevent dropping off of soil during handling.

8. Sod which has been desiccated will be rejected and shall be replaced by the Contractor at no cost to the County.

9. Place sod in a straight line parallel to one another. Stagger lateral joints and butt tight. On slopes 5:1 and steeper, lay sod with long edges parallel to the contour starting at the top of the slope. In drainage ditches and sodded channels, lay sod with the long edge parallel to the flow of water.

10. On slopes 2:1 and steeper and in surface drainage v-shaped or flat bottomed ditches, stake each strip of sod with at least two stakes, spaced not more than two feet apart, or wire staples.

11. Immediately upon completion of a section of sodding, roll, tamp and water until the underside of the sod pad and soil surface beneath it are thoroughly wet and in contact with each other so as to eliminate air pockets. (The recommended rate of watering is one (1) inch per acre.)

12. Completion of laying, rolling, tamping and watering shall be within an eight hour period.

d. Mulch Only

1. Perform grading as required. Place and anchor mulch only at the rates specified in "materials" where indicated and where directed by the Engineer.

e. Time Restrictions

1. When permanent seeding or sodding is specified or directed, and seeding is not allowed because of time restrictions specified in "materials", utilize one or more of the following methods to prevent erosion and sedimentation until such time as permanent seeding or sodding is allowed:

a. Place and anchor straw mulch or wood chips.

b. Apply temporary seeding.

c. Prepare soil as for permanent seeding and then mulch as specified: overseed during next seasonal seeding period.

d. Provide other erosion control measures acceptable to the Engineer and the sediment control inspector.

e. Remove straw or wood chips used as temporary mulch or work into subsoil to a minimum depth of six inches prior to initiation of permanent seeding application.

f. Maintenance of Seeded and Sodded Areas:

1. Maintain seeded and sodded areas until accepted in writing by the Engineer.

2. Water seeded and sodded areas as necessary to maintain adequate moisture in the upper four inches of soil and keep mowed to a height of two to three inches, do not remove more than 1/3 of the grass leaf during initial mowing. Do not mow sod until it is firmly rooted.

3. Inspect seeded and sodded areas for failures and necessary repairs.

4. Provide replacements during the specified planting seasons.

5. If stand of turf is inadequate as determined by the Engineer, overseed and fertilize using half of the rates originally applied, or resod.

6. If stand is over sixty (60) percent damaged, as determined by the Engineer, reestablish following original lime, fertilizer, seed or sod bed preparation and seeding or sodding recommendations.

STANDARD SPECIFICATIONS

CHAIN LINK FENCE

SECTION 600

I. General

a. Description

This section includes providing chain link fencing, gates and accessories, as indicated in accordance with the Contract Documents.

b. Submittals

1. Submit samples for the following:

a. Wire mesh fabric: each width and type to be used-one sample, twelve (12) inches long.

b. Posts, railing, braces, gate frames: one sample of size and type to be used - twenty-four (24) inches long.

c. Truss rod and turnbuckles - one each.

d. Tension wire - one sample, twenty-four (24) inches long.

e. Barbed wire - one sample, twenty-four (24) inches long.

f. Tension bar - one sample, twenty-four (24) inches long.

g. Fabric ties with hardware - four each.

h. Rail and brace ends and post caps - two each.

i. Barbed wire extension arms - one each type.

2. Submit certified test reports before delivery of materials as specified.

II. Materials

a. General

1. Chain link fencing shall conform to applicable parts of FS RR-F-191 as modified herein.

b. Posts FS-RR-F-191/3A as modified herein:

1. Posts, pipes, gate frames, caps, barbed wire and other accessories

and fasteners shall be fabricated of hot dip galvanized steel, or aluminum alloy FS6063-Tt6, as applicable. Posts and rails shall be of the same type material. Weight of zinc coating shall be 1.6 ounces per square foot or greater.

2. End, corner and pull posts shall conform to the following requirements:

   a. Fences five feet and less in height: Type I, Class I, 2.374 inch diameter, weighing 3.65 pounds per foot or Type I, Class 3, 2.374 inch diameter, weighing 1.264 pounds per foot.

   b. Fences over five feet in height; Type I, Class I, 2.875 inch diameter, weighing 5.79 pounds per foot or Type I, Class 3, 2.875 inch diameter weighing 2.00 pounds per foot.

3. Line posts shall conform to the following requirements:

   a. Fabric five feet and less in height; Type I, Class 4, 1.875 inch x 1.675 inch H-beam weighing 2.70 pounds per foot or Type I, Class 6, 2.875 inch x 1.675 inches, H-beam weighing 0.91 pounds per foot, or Type I, Class I, 1.90 inch diameter weighing 2.72 pounds per foot, or Type I, Class 3, 1.90 inch diameter, weighing 0.94 pounds per foot or 1.875 inch C Section yield strength 50,000 psi, weighing 2.34 pounds per foot.

   b. Fabric over five feet in height; Type I, Class 4, 2.625 inch diameter, H-beam weighing 4.1 pounds per foot or Type I, Class 6, 2.625 inch H-beam weighing 1.25 pounds per foot, or Type I, Class I, 2.375 inch diameter, weighing 3.65 pounds per foot, or Type I, Class 3, 2.375 inch diameter, weighing 1.25 pounds per foot or C Section as specified herein above.

4. Gate posts shall be in accordance with Table III, FS-RR-F-191/3a.

5. Gate frames FS-RR-F-191/2a as modified herein, shall be Type I, and Type III, 1.90 inch diameter, weighing 2.72 pounds per foot or 2.00 inch square, weighing 2.60 pounds per foot.

6. Top Rail and braces, F-RR-F-191/3a as modified herein, shall be Type II, Class I, 1.66 inch diameter, weighing 1.35 pounds per foot or Type II,Class 3, 1.66 inch diameter, weighing 0.786 pounds per foot. Fences with barbed wire above fabric may have a top tension wire in lieu of top rail.

7. Barbed wire shall conform to requirements of FS-RR-F221/1a.

8. Accessories shall conform to FS-RR-R191/4a as modified herein.

   a. Tension wire shall be #7 gauge coil spring wire.

c. Chain Link Fabric FS-RR-F-191/1a as modified herein.

1. Fabric shall be one of the following types as shown fabricated in a two inch mesh of 0.148 inch diameter wire:

   a. Type I, zinc-coated steel, minimum 1.8 ounces per square foot coating.

   b. Type II, aluminum coated steel, minimum 0.40 ounces per square foot coating.

   c. Type V, thermally bonded vinyl coated steel, Table III, 1200 pound minimum breaking load, precoat fabric with zinc coating minimum 0.30 ounces per square foot. Color shall be as indicated on the drawings or in the special provisions.

2. Fabric shall be barbed at top and bottom.

d. Padlocks

1. Padlocks shall conform to requirements of FS-FF-P-1016, keyed and master keyed, with two keys for each padlock and two master keys.

e. Concrete

1. Concrete shall be as specified.

f. Grout

1. Grout shall be non-shrink as approved by the Engineer.

III. Execution

a. Fence Installation

1. All necessary clearing, excavation and filling shall be performed as required to provide clear "line of Fence" runs.

2. Post shall be encased in concrete to the depth indicated, to the minimum limits contained herein and extended at least six (6) inches below the bottom of posts. Ten inches diameter of encasement shall be provided for line posts and twelve (12) inches diameter for end, corner, pull and gate posts.

   a. Fences five feet high and less: 2.5 foot encasement.

   b. Fences over five feet high: 3.0 foot encasement.

   c. Gate posts, six (6) foot swing and less: 3.0 foot encasement, twelve (12) inches diameter.

   d. Gate posts over six (6) foot swing, 3.0 foot encasement, sixteen (16) inches diameter.

3. Concrete shall be extended to two (2) inches above finished ground line at posts and smoothly sloped to drain away from the posts.

4. Posts shall be spaced at no more than ten (10) feet nor less than eight (8) feet on centers. Additional posts shall be spaced at

each abrupt change in grade.

5. Where rock is encountered, drill holes two (2) inches deeper than the depth shown or specified. The holes diameter shall be two (2) inches greater than the outside diameter of the post or the greatest dimension of the H Section. Fill the rock portion of the hole with grout with a ratio of 1:3 of cement and concrete sand.

6. Where fence is to be located on concrete structures a section of twelve (12) inch long, steel pipe shall be cast into the concrete at the correct location for the fence posts. The fence post shall be grouted into the steel pipe with s non-shrink grout as previously specified.

7. Corner or pull posts shall be installed at each horizontal or vertical angle point of fifteen (15) degrees or more and at no more than 500 foot intervals. Corner, end and pull posts shall be provided with a horizontal brace and tie rod on each side of the posts extending to and connecting to adjacent line posts.

8. After posts are installed and concrete has set firmly, the top rail and bottom tension wire shall be placed and securely anchored at ends and to line posts before the fabric is hung.

9. Tension wire shall be placed approximately six (6) inches above grade.

10. A brace shall be provided for gate posts, and at each corner,pull and end post for fabric heights of six (6) feet or greater.

11. Ends of fabric by the use of tension bars threaded through loops in the fabric, and secured to the posts by means of bands with bolts and nuts. Bands shall be as specified in FS-RR-F-191/4a.

12. Fabric shall be placed by securing one end and applying sufficient tension by means of mechanical fence stretchers to remove slack before fastening. The fabric shall be fastened to the post at intervals of not more than fifteen (15) inches on center, and to the top rails and bottom tension wire at intervals of not more than twenty-four (24) inches. All attachments shall be made with tie wires.

13. The bottom of the fabric shall be held as uniformly as possible to two (2) inches above finished grade.

14. Where indicated, three strands of barbed wire shall be provided above fence fabric. Stretch the strands to remove sag and anchor firmly to the extension arms. The extension arms on line posts shall be inclined away from the County property at approximately a 45° angle. Extension arms on corner posts and gates shall be vertical.

15. Fence gates and gate stops shall be installed as shown.

16. Gate posts shall be accurately set in concrete so that the plunger can be fully engaged.

17. Padlocks and chains shall be furnished where indicated.

18. The following alternate method of post anchorage will be acceptable:

    a. Drive post into ground and hold rigidly in position by means of two (2) steel angle anchors driven diagonally and attached to the post on opposite sides.

    b. Anchors, attachments and methods shall be in accordance with MSHA standard details.

b. Defective Work

1. Fencing which is improperly located and not true to line and grade and posts not plumb shall be removed and replaced.

2. Damaged galvanizing of components shall be repaired by thoroughly wire brushing the damaged area to remove loose and cracked zinc coating, and painting with two (2) coats of zinc dust, zinc oxide primer, MIL-P-21035. The first coat shall be allowed to dry thoroughly before the second coat is applied.

3. Damaged, aluminum coated components shall be repaired by cleaning as specified above, and painting with two (2) coats of aluminum paint, FS-TT-P-38.